Model No.GB801 BENCH GRINDER 205MM

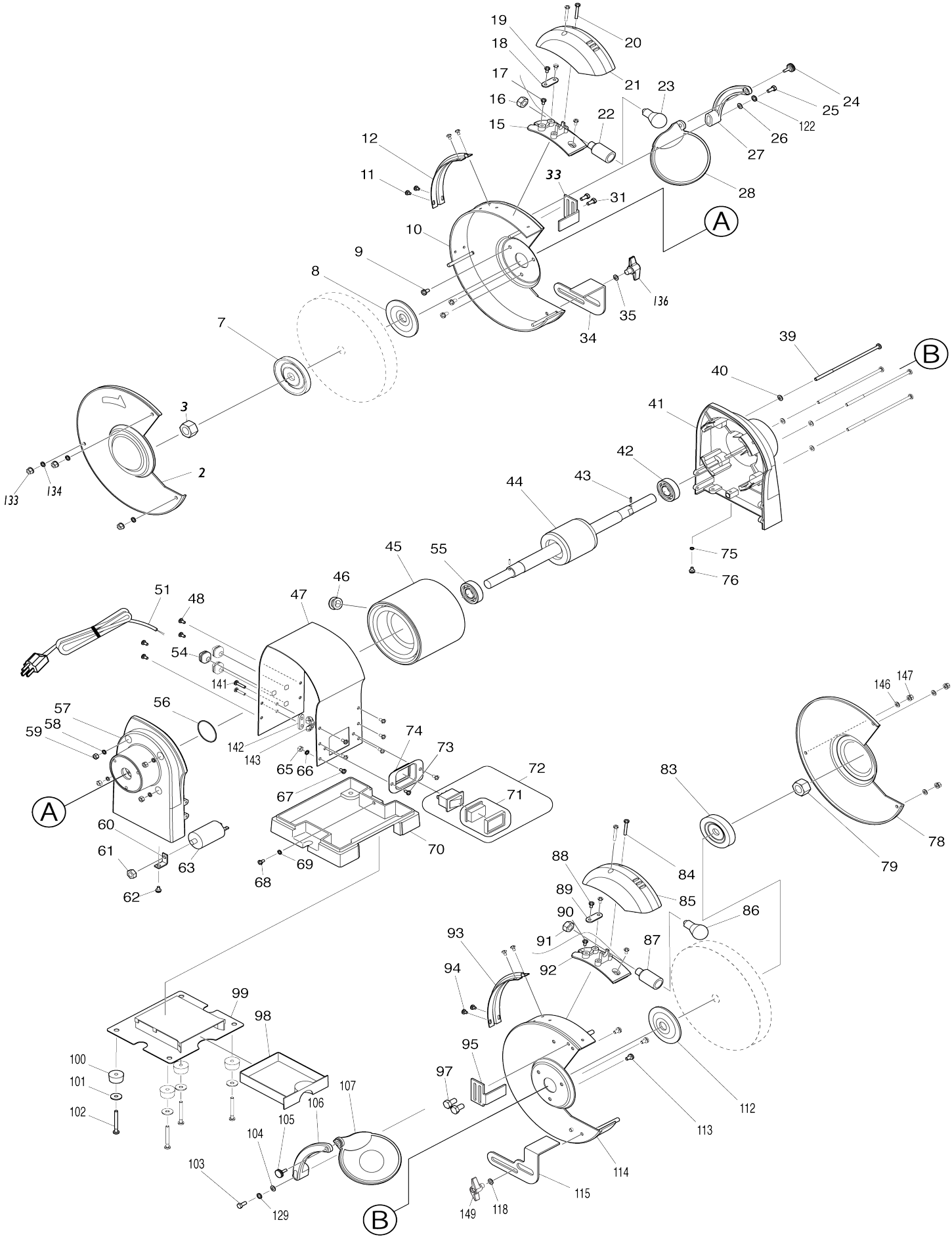

Model No.GB801 BENCH GRINDER 205MM

Item No.	Parts No.	Description	Interchangeability	Q'ty	New/ Old	Note1	Note2
001	911276-3	Pan head screw M5X55 W		2	*		
002	AL00000219	LEFT WHEEL COVER		1	*		
002-1	AL00000219	LEFT WHEEL COVER	O	1			
003	AL00000058	HEX NUT M16 LH		1	*		
003-1	AL00000058	HEX NUT M16 LH	O	1			
004	AL00000059	PAN HEAD SCREW M5X6		2	*		
004-1	AL00000059	PAN HEAD SCREW M5X6	O	2	*		
005	AL00000060	BALANCE PLATE		1	*		
006	AL00000061	BALANCE WEIGHT		2	*		
007	AL00000062	OUTER FLANGE 84		1	*		
007-1	AL00000062	OUTER FLANGE 84	O	1	*		
007-2	AL00000181	OUTER FLANGE 68	X	1	*		
007-3	AL00000265	OUTER FLANGE 85	X	1			
008	AL00000182	INNER FLANGE 68		1	*		
008-1	AL00000182	INNER FLANGE 68	O	1	*		
008-2	AL00000264	INNER FLANGE 85	X	1			
009	911211-1	Pan head screw M5X12 W		3	*		
009-1	AL00000111	PAN HEAD SCREW M5X16 WITH W	X	3			
010	AL00000220	WHEEL COVER L (INNER) CE		1	*		
010-1	AL00000257	LEFT WHEEL GUARD (INNER)	X	1			
011	911107-6	Pan head screw M4X8		4	*		
011-1	AL00000114	PAN HEAD SCREW M4X6	X	4			
012	AL00000065	CORD COVER		1	*		
012-1	AL00000065	CORD COVER	O	1			
013	942101-7	Spring washer 5		1	*		
014	931201-8	Hex. nut M5		1	*		
015	AL00000194	LAMP COVER BASE		1			
016	AL00000009	PLASTIC HEX NUT M10		1	*		
016-1	AL00000009	PLASTIC HEX NUT M10	O	1			
017	911113-1	Pan head screw M4X10 WR		2	*		
017-1	AL00000103	PAN HEAD SCREW M4X8	X	2			
018	AL00000010	CORD CLAMP BASE		1	*		
018-1	AL00000010	CORD CLAMP BASE	O	1			
019	911118-1	Pan head screw M4X12 WR		2	*		
019-1	AL00000104	PAN HEAD SCREW M4X10	X	2			
020	911156-3	Pan head screw M4X30 W		2	*		
020-1	AL00000105	PAN HEAD SCREW M4X30	O	2			
021	AL00000011	LAMP COVER ASSY		1	*		
021-1	AL00000011	LAMP COVER ASSY	O	1	*		
021-2	AL00000310	LAMP COVER ASSY	O	1			
022	AL00000012	LAMP SOCKET S-25		1	*		
022-1	AL00000138	LAMP SOCKET S-25	X	1	*		
022-2	AL00000138	LAMP SOCKET S-25	O	1			
023	AL00000013	BULB S-25 12V 10W		1	*		
023-1	AL00000013	BULB S-25 12V 10W	O	1			
024	AL00000014	KNOB BOLT M4X12		1	*		
024-1	AL00000014	KNOB BOLT M4X12	O	1			

025	921351-7	Hex. head bolt M6X30 W		1	*		
025-1	AL00000119	HEX BOLT M6X30	O	1			
026	941151-9	Flat washer 6		1	*		
026-1	AL00000127	FLAT WASHER 6	O	1			
027	AL00000015	EYE SHIELD MOUNTING ARM L		1	*		
027-1	AL00000015	EYE SHIELD MOUNTING ARM L	O	1			
028	AL00000016	EYE SHIELD L ASSY		1	*		
028-1	AL00000016	EYE SHIELD L ASSY	O	1			
029	931201-8	Hex. nut M5		1	*		
030	942101-7	Spring washer 5		1	*		
031	921212-1	Hex. head bolt M5X12		1	*		
031-1	AL00000252	HEX BOLT M5X10 WITH WR	X	2			
032	942101-7	Spring washer 5		1	*		
033	AL00000066	LEFT SPARK SHIELD		1	*		
033-1	AL00000066	LEFT SPARK SHIELD	O	1			
034	AL00000067	LEFT WORK REST		1	*		
034-1	AL00000067	LEFT WORK REST	O	1			
035	941202-8	Flat washer 8		2	*		
035-1	AL00000128	FLAT WASHER 8	O	2	*		
035-2	AL00000128	FLAT WASHER 8	X	1			
036	942101-7	Spring washer 5		1	*		
037	931201-8	Hex. nut M5		1	*		
038	921411-5	Hex. head bolt M8X12 W		2	*		
038-1	AL00000118	HEX BOLT M8X10	X	2	*		
039	AL00000068	PAN HEAD SCREW M5X142		4			
040	941101-4	Flat washer 5		4	*		
040-1	AL00000126	FLAT WASHER 5	O	4			
041	AL00000069	HOUSING R		1	*		
041-1	AL00000069	HOUSING R	O	1			
042	211306-3	Ball bearing 6204LLB		1	*		
042-1	AL00000101	BALL BEARING 6204	O	1			
043	951051-5	Spring pin 3-8		2	*		
043-1	AL00000135	SPRING PIN 3X8	O	2			
044	AL00000191	ROTOR		1	*		
044-1	AL00000237	ROTOR	S	1	*		
044-2	AL00000241	ROTOR	X	1			
045	AL00000190	STATOR		1	*		
045-1	AL00000236	STATOR 220-240V 50HZ	S	1	*		
045-2	AL00000236	STATOR 220-240V 50HZ	O	1	*		
045-3	AL00000262	STATOR 220-240V 50HZ-60HZ	X	1			
046	AL00000022	GROMMET		1	*		
046-1	AL00000022	GROMMET	O	1	*		
046-2	AL00000314	GROMMET	<	1			
047	AL00000184	HOUSING CENTER		1	*		
047-1	AL00000184	HOUSING CENTER	O	1	*		
047-2	AL00000260	HOUSING CENTER	X	1			
048	911113-1	Pan head screw M4X10 WR		4	*		
048-1	AL00000108	PAN HEAD SCREW M4X8	X	4			
049	AL00000192	CORD CLIP PLATE (2 HOLES)		1	*		
050	911113-1	Pan head screw M4X10 WR		2	*		
050-1	AL00000103	PAN HEAD SCREW M4X8	X	2	*		

051	AL00000171	POWER SUPPLY CORD		1	*		
051-1	AL00000152	POWER SUPPLY CORD EURO 3P	X	1			
054	AL00000026	GROMMET WITH STRAIN RELIEF		3	*		
054-1	AL00000026	GROMMET WITH STRAIN RELIEF	O	3	*		
054-2	AL00000026	GROMMET WITH STRAIN RELIEF	O	2	*		
054-3	AL00000026	GROMMET WITH STRAIN RELIEF	O	3			
055	211306-3	Ball bearing 6204LLB		1	*		
055-1	AL00000101	BALL BEARING 6204	O	1			
056	AL00000073	WAVE SPRING WASHER 39		1	*		
056-1	AL00000073	WAVE SPRING WASHER 39	O	1			
057	AL00000074	HOUSING L		1	*		
057-1	AL00000074	HOUSING L	O	1			
058	942101-7	Spring washer 5		4	*		
058-1	AL00000132	SPRING WASHER 5	O	4			
059	931201-8	Hex. nut M5		4	*		
059-1	AL00000121	HEX NUT M5	O	4			
060	AL00000029	CAPACITOR SUPPORT		1	*		
060-1	AL00000029	CAPACITOR SUPPORT	O	1			
061	931402-8	Hex. nut M8		1	*		
061-1	AL00000122	HEX NUT M8	O	1			
062	911113-1	Pan head screw M4X10 WR		1	*		
062-1	AL00000295	PAN HEAD SCREW M4X7 WITH W G	X	1			
063	AL00000099	CAPACITOR 10 MICRO F/450V		1	*		
063-1	AL00000099	CAPACITOR 10 MICRO F/450V	O	1	*		
063-2	AL00000250	CAPACITOR 10 MICRO F/450V	O	1			
064	942051-6	Spring washer 4		2	*		
064-1	AL00000131	SPRING WASHER 4	O	2	*		
065	931102-0	Hex. nut M4		4	*		
065-1	AL00000120	HEX NUT M4	O	4	*		
065-2	AL00000120	HEX NUT M4	O	2			
066	942051-6	Spring washer 4		2	*		
066-1	AL00000131	SPRING WASHER 4	O	2			
067	911113-1	Pan head screw M4X10 WR		6	*		
067-1	AL00000108	PAN HEAD SCREW M4X8	X	6			
068	911113-1	Pan head screw M4X10 WR		1	*		
068-1	AL00000295	PAN HEAD SCREW M4X7 WITH W G	X	1			
069	AL00000134	TOOTHED LOCK WASHER 4		1			
070	AL00000076	BASE		1			
071	AL00000033	SWITCH COVER ASSY		1	*		
072	AL00000032	SWITCH ASSY COVER		1	*		
072-1	AL00000168	SWITCH WITH COVER	<	1			
073	911113-1	Pan head screw M4X10 WR		2	*		
073-1	AL00000103	PAN HEAD SCREW M4X8	X	2			
074	AL00000031	SWITCH BOARD		1			
075	AL00000134	TOOTHED LOCK WASHER 4		1			
076	911113-1	Pan head screw M4X10 WR		1	*		
076-1	AL00000295	PAN HEAD SCREW M4X7 WITH W G	X	1			
078	AL00000224	RIGHT WHEEL COVER		1	*		
078-1	AL00000224	RIGHT WHEEL COVER	O	1			

079	AL00000078	HEX NUT M16		1			
080	AL00000059	PAN HEAD SCREW M5X6		2	*		
080-1	AL00000059	PAN HEAD SCREW M5X6	O	2	*		
081	AL00000060	BALANCE PLATE		1	*		
082	AL00000061	BALANCE WEIGHT		2	*		
083	AL00000181	OUTER FLANGE 68		1	*		
083-1	AL00000181	OUTER FLANGE 68	O	1	*		
083-2	AL00000265	OUTER FLANGE 85	X	1			
084	911156-3	Pan head screw M4X30 W		2	*		
084-1	AL00000105	PAN HEAD SCREW M4X30	O	2			
085	AL00000011	LAMP COVER ASSY		1	*		
085-1	AL00000011	LAMP COVER ASSY	O	1	*		
085-2	AL00000310	LAMP COVER ASSY	O	1			
086	AL00000013	BULB S-25 12V 10W		1	*		
086-1	AL00000013	BULB S-25 12V 10W	O	1			
087	AL00000012	LAMP SOCKET S-25		1	*		
087-1	AL00000138	LAMP SOCKET S-25	X	1	*		
087-2	AL00000138	LAMP SOCKET S-25	O	1			
088	911118-1	Pan head screw M4X12 WR		2	*		
088-1	AL00000104	PAN HEAD SCREW M4X10	X	2			
089	AL00000010	CORD CLAMP BASE		1	*		
089-1	AL00000010	CORD CLAMP BASE	O	1			
090	911113-1	Pan head screw M4X10 WR		2	*		
090-1	AL00000103	PAN HEAD SCREW M4X8	X	2			
091	AL00000009	PLASTIC HEX NUT M10		1	*		
091-1	AL00000009	PLASTIC HEX NUT M10	O	1			
092	AL00000194	LAMP COVER BASE		1			
093	AL00000065	CORD COVER		1	*		
093-1	AL00000065	CORD COVER	O	1			
094	911107-6	Pan head screw M4X8		4	*		
094-1	AL00000114	PAN HEAD SCREW M4X6	X	4			
095	AL00000079	RIGHT SPARK SHIELD		1	*		
095-1	AL00000079	RIGHT SPARK SHIELD	O	1			
096	942101-7	Spring washer 5		1	*		
097	921212-1	Hex. head bolt M5X12		1	*		
097-1	AL00000252	HEX BOLT M5X10 WITH WR	X	2			
098	AL00000080	COOLANT TRAY		1			
099	AL00000081	UNDER COVER		1	*		
099-1	AL00000081	UNDER COVER	O	1			
100	AL00000083	PUBBER FOOT		4	*		
100-1	AL00000083	PUBBER FOOT	O	4	*		
100-2	AL00000313	PUBBER FOOT	<	4			
101	941101-4	Flat washer 5		4	*		
101-1	AL00000130	FLAT WASHER 5 (L)	O	4			
102	911267-4	Pan head screw M5X45		4	*		
102-1	AL00000112	PAN HEAD SCREW M5X45	O	4			
103	921351-7	Hex. head bolt M6X30 W		1	*		
103-1	AL00000119	HEX BOLT M6X30	O	1			
104	941151-9	Flat washer 6		1	*		
104-1	AL00000127	FLAT WASHER 6	O	1			
105	AL00000014	KNOB BOLT M4X12		1	*		
105-1	AL00000014	KNOB BOLT M4X12	O	1			

106	AL00000038	EYE SHIELD MOUNTING ARM R		1	*		
106-1	AL00000038	EYE SHIELD MOUNTING ARM R	O	1			
107	AL00000037	EYE SHIELD WITH MAGNIFYER		1	*		
107-1	AL00000037	EYE SHIELD WITH MAGNIFYER	O	1			
108	931201-8	Hex. nut M5		1	*		
109	942101-7	Spring washer 5		1	*		
110	931201-8	Hex. nut M5		1	*		
111	942101-7	Spring washer 5		1	*		
112	AL00000063	INNER FLANGE 85		1	*		
112-1	AL00000063	INNER FLANGE 85	O	1	*		
112-2	AL00000182	INNER FLANGE 68	X	1	*		
112-3	AL00000264	INNER FLANGE 85	X	1			
113	911211-1	Pan head screw M5X12 W		3	*		
113-1	AL00000111	PAN HEAD SCREW M5X16 WITH W	X	3			
114	AL00000223	WHEEL COVER R(INNER) CE		1	*		
114-1	AL00000258	RIGHT WHEEL GUARD (INNER)	X	1			
115	AL00000085	RIGHT WORK REST		1	*		
115-1	AL00000085	RIGHT WORK REST	O	1			
116	942101-7	Spring washer 5		1	*		
117	931201-8	Hex. nut M5		1	*		
118	941202-8	Flat washer 8		2	*		
118-1	AL00000128	FLAT WASHER 8	O	2	*		
118-2	AL00000128	FLAT WASHER 8	X	1			
119	921411-5	Hex. head bolt M8X12 W		2	*		
119-1	AL00000118	HEX BOLT M8X10	X	2	*		
120	911274-7	Pan head screw M5X50 WG		4	*		
122	AL00000133	SPRING WASHER 6		1			
129	AL00000133	SPRING WASHER 6		1			
133	AL00000204	HEX NUT M6		3			
134	AL00000127	FLAT WASHER 6		3			
136	AL00000253	KNOB BOLT M8X9		1			
140	AL00000180	CORD GUARD WITH STRAIN RELIEF		1	*		
141	AL00000251	PAN HEAD SCREW M4X16		2			
142	AL00000010	CORD CLAMP BASE		1			
143	AL00000254	CORD CLAMP		1			
146	AL00000127	FLAT WASHER 6		3			
147	AL00000204	HEX NUT M6		3			
149	AL00000253	KNOB BOLT M8X9		1			
A01	AL00000086	WRENCH 17		1	*		
A01-1	AL00000086	WRENCH 17	O	1	*		
A01-2	AL00000087	WRENCH 10-13-17	X	1			
A02	AL00000087	WRENCH 10-13-17		1	*		
A02-1	AL00000087	WRENCH 10-13-17	O	1	*		
A02-2	AL00000263	WRENCH 8-24	X	1			
A03	AL00000195	WRENCH		1	*		
A03-1	AL00000086	WRENCH 17	X	1			
A04	A-47254	GRINDING WHEEL(BENCH,205)		1	*		
A04-1	B-51976	G-WHEEL GC 120 205X19X15.88	<	1	*		
A04-2	B-51976	G-WHEEL GC 120 205X19X15.88	O	1			
A05	A-47260	GRINDING WHEEL (BENCH,205)		1	*		

A05-1	B-51960	G-WHEEL WA 60 205X19X15.88	X	1			
F01	AL00000147	SAFETY GOGGLE		1	*		
F01-1	AL00000147	SAFETY GOGGLE	O	1	*		

Please state Parts No. when your order.

Print Date 10/06/2025