Model No.GA9070 230MM ANGLE GRINDER

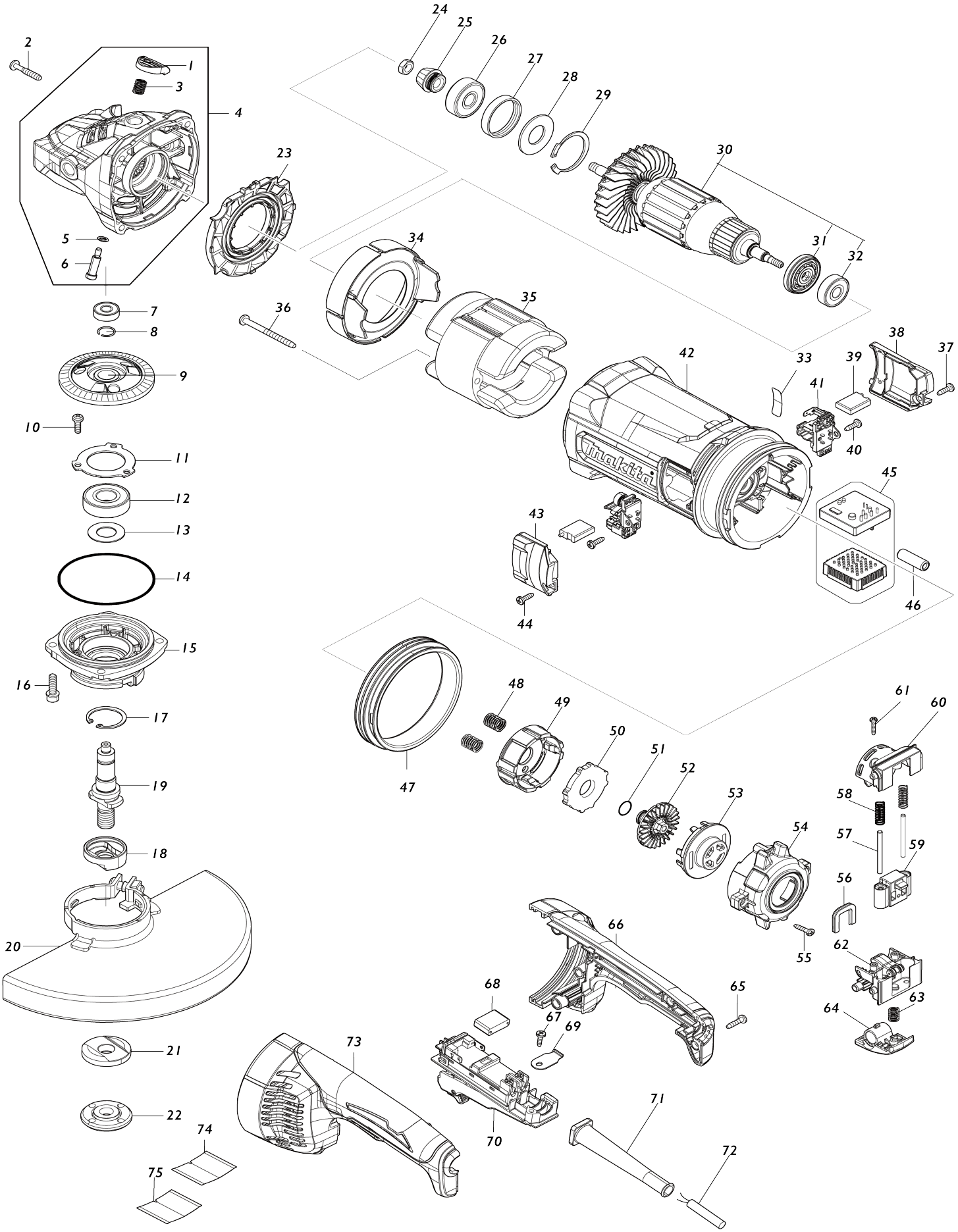

Model No.GA9070 230MM ANGLE GRINDER

Item No.	Parts No.	Description	Interchangeability	Q'ty	New/ Old	Note1	Note2
001	456247-8	PIN CAP		1			
002	266553-1	TAPPING SCREW 5X30		4			
003	234391-9	COMPRESSION SPRING 8		1			
004	140Y89-7	GEAR HOUSING COMPLETE		1			
C10	263002-9	RUBBER PIN 4		1			
C20	262118-7	FELT RING 18		1			
D10		INC. 1,3,5,6					
005	213026-5	O RING 7		1	*		
005-1	213A14-8	O-RING7	O	1			
006	256571-7	SHOULDER PIN 7		1			
007	211032-4	BALL BEARING 608ZZ		1			
008	233925-5	RING SPRING 13		1			
009	227653-2	SPIRAL BEVEL GEAR 54		1			
010	265120-9	PAN HEAD SCREW M5X16		3			
011	285741-1	BEARING RETAINER 50		1			
012	211278-2	BALL BEARING 6203DDW		1			
013	267487-1	FLAT WASHER 17		1			
014	213760-7	O RING 78		1			
015	312A97-6	BEARING BOX		1			
016	265541-5	HEX. SOCKET HEAD BOLT M6X22		4			
017	962151-6	RETAINING RING R-32		1			
018	310800-3	LEAD FLANGE		1			
019	327762-8	SPINDLE		1			
020	122891-0	WHEEL COVER 230K ASSEMBLY		1	*		
C10	213017-6	O RING 6		1	*		
C20	265198-2	+PAN HEAD SCREW M8X25		1	*		
020-1	141P32-5	WHEEL COVER 230K COMPLETE	<	1			
C10	213017-6	O RING 6		1	*		
C20	265198-2	+PAN HEAD SCREW M8X25		1			
C30	8050A1-8	CAUTION LABEL		1			
021	224447-6	INNER FLANGE 42B		1			
022	224485-8	LOCK NUT 14-45		1			
023	456238-9	DIFFUSER		1			
024	252194-9	HEX. NUT M8		1			
025	227652-4	SPIRAL BEVEL GEAR 13		1			
026	211132-0	BALL BEARING 6301DDW		1			
027	262085-6	RUBBER RING 38		1			
028	267299-2	FLAT WASHER 20		1			
029	962211-4	RETAINING RING R-42		1			
030	511A14-5	ARMATURE ASS'Y 220-240V		1			
C10	240161-6	FAN 86		1			
D10		INC. 31,32					
031	681025-9	INSULATION WASHER		1			
032	210267-4	BALL BEARING 6200DDW		1			
033	811P30-0	GA9070 SERIAL NO. LABEL		1			
034	456239-7	BAFFLE PLATE		1			
035	621924-3	FIELD 240V		1			

036	266044-2	TAPPING SCREW 5X60		2			
037	266385-6	TAPPING SCREW 4X14		1	*		
037-1	265B74-2	TAPPING SCREW 4X14	O	1			
038	183T24-2	BRUSH HOLDER COVER SET		1			
D10		INC. 43					
039	191T31-1	CARBON BRUSH SET CB-224		1			
040	266385-6	TAPPING SCREW 4X14		2	*		
040-1	265B74-2	TAPPING SCREW 4X14	O	2			
041	644001-4	BRUSH HOLDER		2			
042	413343-5	MOTOR HOUSING		1			
043	183T24-2	BRUSH HOLDER COVER SET		1			
D10		INC. 38					
044	266385-6	TAPPING SCREW 4X14		1	*		
044-1	265B74-2	TAPPING SCREW 4X14	O	1			
045	620D47-8	CONTROLLER		1			
046	688165-4	LINE FILTER		1			
047	422671-7	VIBRATION PROOF RUBBER		1			
048	232677-5	COMPRESSION SPRING 10		2			
049	312A98-4	SHOE HOLDER		1			
050	422672-5	BRAKE SHOE		1			
051	213118-0	O RING 12		1			
052	313360-4	FAN 45		1			
053	413388-3	SHOE HOLDER CAP		1			
054	140Y86-3	SHOE HOLDER COVER COMPLET E		1			
C10	263027-3	RUBBER PIN 4		2			
055	266326-2	TAPPING SCREW 4X18		2	*		
055-1	265B67-9	TAPPING SCREW 4X18	O	2			
056	422669-4	LINK SEAL		1			
057	256225-6	PIN 4		2			
058	232676-7	COMPRESSION SPRING 7		2			
059	140Y87-1	SLIDE RAIL COMPLETE		1			
060	413381-7	UPPER LINK CASE		1			
061	266130-9	TAPPING SCREW BIND PT 3X16		2			
062	140Y88-9	LOWER LINK CASE COMPLETE		1			
063	233375-4	COMPRESSION SPRING 7		1			
064	413389-1	LOCK BUTTON		1			
065	266326-2	TAPPING SCREW 4X18		4	*		
065-1	265B67-9	TAPPING SCREW 4X18	O	4			
066	183T22-6	HANDLE SET		1			
D10		INC. 73					
067	266385-6	TAPPING SCREW 4X14		1	*		
067-1	265B74-2	TAPPING SCREW 4X14	O	1			
068	645088-9	NOISE SUPPRESSOR		1			
069	687169-3	STRAIN RELIEF		1			
070	632S37-9	SWITCH UNIT		1			
071	682573-1	CORD GUARD 10		1			
072	695107-1	POWER SUPPLY CORD 1.5-2-2.5		1			
073	183T22-6	HANDLE SET		1			
D10		INC. 66					
074	811P26-1	GA9070 NAME PLATE		1			
075	8037A3-0	CLEAR LABEL		1			

A01	162264-5	VIBRATION PROOF GRIP		1			
A02	782034-2	LOCK NUT WRENCH 35		1			
A10	122913-6	WHEEL COVER 230CK ASSEMBLY		1			
C10	213017-6	O RING 6		1	*		
C20	265198-2	+PAN HEAD SCREW M8X25		1			
F04	191T15-9	DUST COVER ATTACHMENT SET		1			
F07	194305-9	LOCK NUT RELEASE SOCKET 35 SET		1			
F16	198678-2	INNER FLANGE 45CC SET		1			
F45	191X44-6	180MM DUST COLLECT COVER K SET		1			

Please state Parts No. when your order.

Print Date 09/07/2024