Model No.GA9040R Angle Grinder

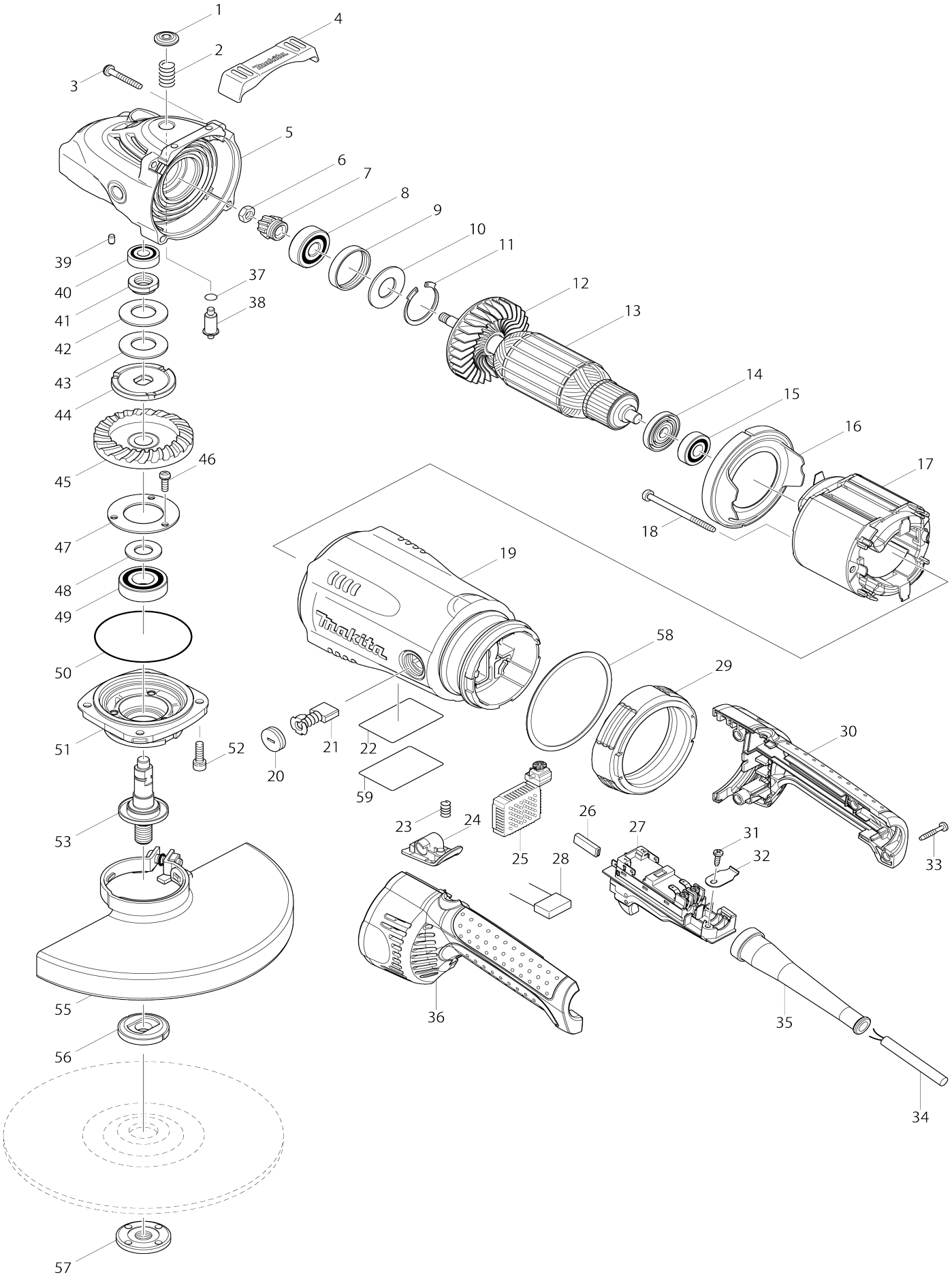

Model No.GA9040R Angle Grinder

Item No.	Parts No.	Description	Interchangeability	Q'ty	New/ Old	Note1	Note2
001	419133-4	Pin cap		1			
002	233292-8	Compression spring 12		1			
003	266012-5	Binding head tapping screw 5X35		4	*		
003-1	265B72-6	Binding head tapping screw 5X35	O	4			
004	419144-9	Bumper		1			
005	154685-5	Gear housing complete		1	*		
C10	262118-7	Felt ring 18		1	*		
005-1	142754-4	Gear housing complete	<	1			
C10	262118-7	Felt ring 18		1			
006	252194-9	Hex. nut M8		1			
007	227490-4	Spiral bevel gear 12		1			
008	211132-0	Ball bearing 6301DDW		1			
009	262085-6	Rubber ring 38		1			
010	267299-2	Flat washer 20		1			
011	962211-4	Retaining ring (INT) round R-42		1			
012	240081-4	Fan 80		1			
013	517833-1	Armature assembly 220V		1			
013		INC. 12,14,15					
014	681630-2	Insulation washer		1			
015	211087-9	Ball bearing 6200DDW		1			
016	419135-0	Baffle plate		1			
017	526223-7	Field assembly 220-240V		1			
C10	654197-3	Ring terminal		2			
C20	654502-4	Non-insulated splice		2			
018	266059-9	Binding head tapping screw 5X75		2			
019	154786-9	Motor housing complete		1			
C10	643712-8	Brush holder		2			
020	643700-5	Holder cap 7-18		2	*		
020-1	644802-0	Holder cap	O	2			
021	191957-7	Carbon brush set CB-204		1	*		
021-1	194992-4	Carbon brush set CB-204	O	1			
022	867542-5	Name plate GA9040R		1			
023	233375-4	Compression spring 7		1			
024	451630-4	Lock button		1			
025	631946-5	Controller		1	*		
025-1	620G50-7	Controller	<	1			
026	686036-9	Receptacle sleeve		2			
027	650107-8	Switch TG08-2300-013		1			
028	645088-9	Noise suppressor		1	*		
028-1	645088-9	Noise suppressor	O	1			
029	421936-4	Vibration proof rubber		1			
030	188845-7	Handle set		1			
C10	423350-0	Sponge sheet		1			
030		INC. 36					
031	266192-7	Binding head tapping screw 4X14		1	*		

031-1	265B74-2	Binding head tapping screw 4X14	O	1			
032	687169-3	Strain relief		1			
033	265999-8	Binding head tapping screw 4X25		4	*		
033-1	265B73-4	Binding head tapping screw 4X25	O	4			
034	695107-1	Power supply cord 1.5-2-2.5		1			
035	682560-0	Cord guard 10		1			
036	188845-7	Handle set		1			
C10	423350-0	Sponge sheet		1			
036		INC. 30					
037	213062-1	O-ring 9		1			
038	256491-5	Shoulder pin 5		1			
039	263002-9	Rubber pin 4		1			
040	211061-7	Ball bearing 6000LLB		1			
041	252429-8	Circular nut M15-23		1			
042	232163-6	Coned disc spring 20		1			
043	232163-6	Coned disc spring 20		1			
044	267798-4	Lock washer		1			
045	227492-0	Spiral bevel gear 53C		1			
046	265120-9	Pan head screw M5X16		3			
047	285724-1	Bearing retainer 50		1			
048	267167-9	Flat washer 15		1			
049	211278-2	Ball bearing 6203DDW		1			
050	213760-7	O-ring 78		1			
051	318377-2	Bearing box		1			
052	265541-5	Hex. socket head bolt M6X22		4			
053	154777-0	Spindle complete		1			
C10	345629-8	Labyrinth ring 25		1			
055	122891-0	Wheel cover 230K assembly		1	*		
C10	213017-6	O-ring 6		1	*		
C11	213775-4	O-ring 7	O	1	*		
C20	265198-2	Pan head screw M8X25		1	*		
055-1	141P32-5	Wheel cover 230K complete	<	1	*		
C11	213775-4	O-ring 7	O	1	*		
C20	265198-2	Pan head screw M8X25		1	*		
C30	8050A1-8	Caution label		1	*		
055-2	122891-0	Wheel cover 230K assembly	<	1	*		
C11	213775-4	O-ring 7	O	1	*		
C20	265198-2	Pan head screw M8X25		1	*		
055-3	141P32-5	Wheel cover 230K complete	<	1	*		
C11	213775-4	O-ring 7	O	1	*		
C20	265198-2	Pan head screw M8X25		1	*		
C30	8050A1-8	Caution label		1	*		
055-4	141P32-5	Wheel cover 230K complete	O	1			
C11	213775-4	O-ring 7	O	1			
C20	265198-2	Pan head screw M8X25		1			
C30	8050A1-8	Caution label		1			
056A	224415-9	Inner flange 42		1			
056B	122444-5	Inner flange 47 assembly		1			
057	224543-0	Lock nut 14-45		1			

058	261131-2	Nylon washer 89		1			
059	819357-6	Clear label		1	*		
059-1	804Y42-4	Clear label	<	1	*		
A01	162264-5	Vibration proof grip		1			
A02	782407-9	Lock nut wrench 35		1	*		
A02-1	197610-3	Lock nut wrench 35 set	O	1	*		
A02-2	782407-9	Lock nut wrench 35	O	1			
A03	122913-6	Wheel cover 230CK assembly		1	*		
C10	213017-6	O-ring 6		1	*		
C20	265198-2	Pan head screw M8X25		1	*		
A03-1	122913-6	Wheel cover 230CK assembly		1			
F01	195354-9	Toolless lock nut set		1			
F05	198440-5	Dust collect cover K set (230MM)		1			
F45	191X44-6	Dust collect cover K set 180mm		1			

Please state Parts No. when your order.

Print Date 10/27/2026