Model No.GA6040C 150MM ANGLE GRINDER

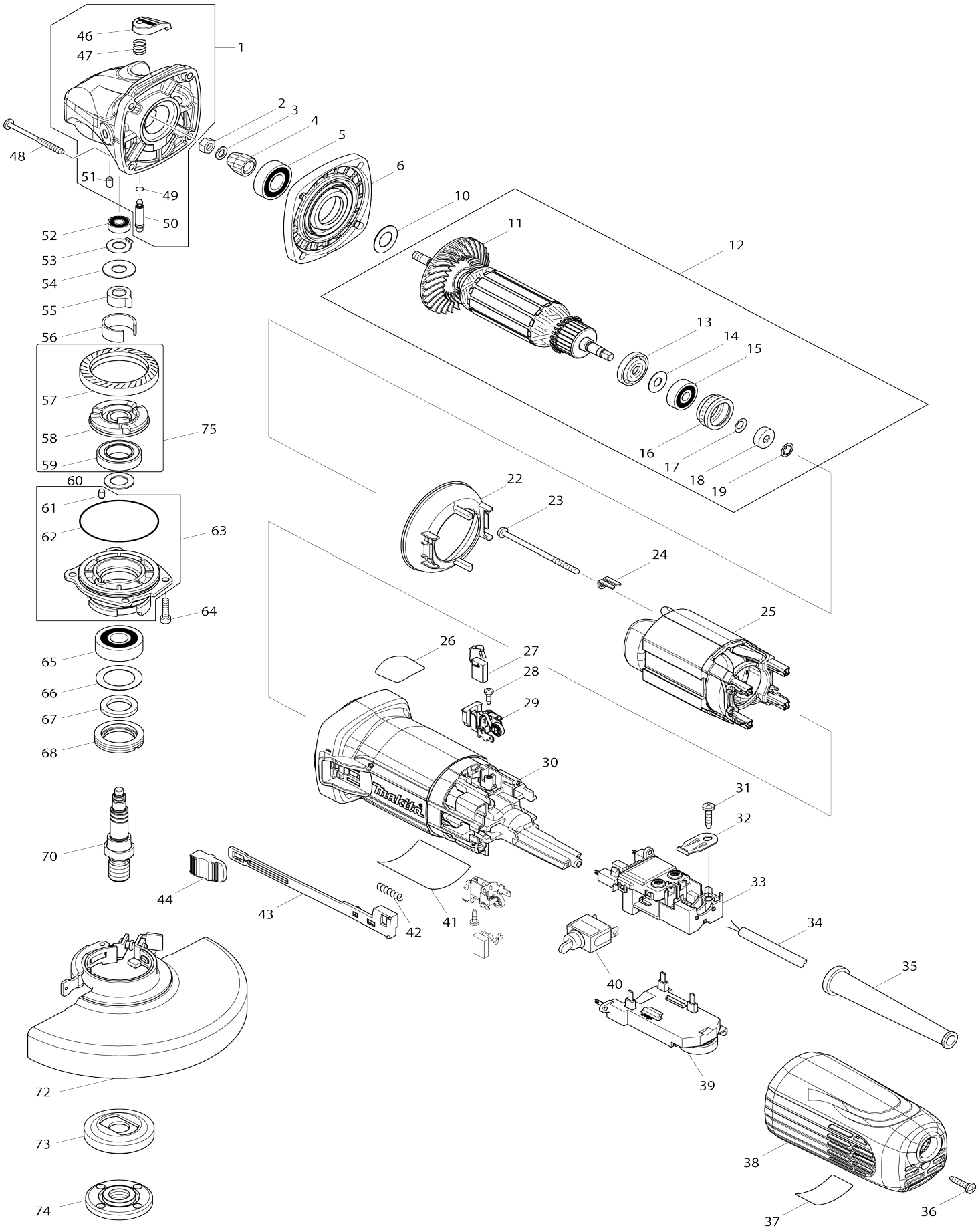

Model No.GA6040C 150MM ANGLE GRINDER

Item No.	Parts No.	Description	Interchangeability	Q'ty	New/ Old	Note1	Note2
001	168705-9	GEAR HOUSING COMPLETE		1	*		
001-1	319310-7	GEAR HOUSING	<	1	*		
001-2	136013-6	GEAR HOUSING ASS'Y	<	1			
001-2		INC. 46,47,49-51					
002	252186-8	HEX. NUT M6		1			
003	253077-6	FLAT WASHER 6		1			
004	227593-4	SPIRAL BEVEL GEAR 9		1			
005	211142-7	BALL BEARING 6001LLB		1			
006	318835-8	GEAR HOUSING COVER		1	*		
006-1	141981-0	GEAR HOUSING COVER COMPLETE	<	1			
010	253084-9	FLAT WASHER 12		1			
011	240134-9	FAN 60		1			
012	515373-3	ARMATURE ASS'Y 220-240V		1	*		
012		INC. 11,13-15			*		
012-1	510377-0	ARMATURE ASS'Y 220-240V	<	1	*		
012-1		INC. 11,13-19			*		
012-2	510510-4	ARMATURE ASS'Y 220-240V	<	1			
012-2		INC. 11,13-19					
013	681656-4	INSULATION WASHER		1			
014	253823-7	FLAT WASHER 7		1			
015	210027-4	BALL BEARING 627DDW		1			
016	421738-8	LABYRINTH RUBBER RING 22		1	*		
016-1	422750-1	LABYRINTH RUBBER RING 22	<	1			
017	267756-0	WAVE WASHER 6		1			
018	688117-5	MAGNET SLEEVE		1			
019	259039-2	SELF LOCK 6		1			
022	453367-9	BUFFLE PLATE		1			
023	266258-3	TAPPING SCREW 4X70		2			
024	344871-8	RETAINER		2			
025	626653-3	FIELD 220-240V		1			
026	898443-6	SJS2 MARK LABEL		1	*		
027	191978-9	A.C. CARBON BRUSH CB-318		1			
028	266007-8	TAPPING SCREW BIND PT 3X10		2			
029	643769-9	BRUSH HOLDER		2	*		
029-1	643770-4	BRUSH HOLDER	<	2			
030	453366-1	MOTOR HOUSING		1			
031	266326-2	TAPPING SCREW 4X18		1	*		
031-1	265B67-9	TAPPING SCREW 4X18	O	1			
032	687169-3	STRAIN RELIEF		1			
033	638947-4	SWITCH BLOCK		1	*		
033-1	632K98-1	SWITCH BLOCK	<	1			
034	695034-2	POWER SUPPLY CORD 1.0-2-4.0		1			
035	682559-5	CORD GUARD 8		1			
036	266326-2	TAPPING SCREW 4X18		1	*		
036-1	265B67-9	TAPPING SCREW 4X18	O	1			
037	898445-2	INDICATION LABEL		1	*		
037-1	817M63-5	INDICATION LABEL	<	1			

038	453365-3	REAR COVER C		1			
039	620129-2	CONTROLLER		1	*		
039-1	620736-1	CONTROLLER	<	1	*		
039-2	620G44-2	CONTROLLER	<	1			
040	651418-4	SWITCH ST115A-40		1	*		
040-1	651418-4	SWITCH ST115A-40	O	1			
041	897092-6	GA6040C NAME PLATE		1	*		
041-1	897092-6	GA6040C NAME PLATE	<	1			
042	233071-4	COMPRESSION SPRING 4		1			
043	453847-5	SWITCH LEVER		1			
044	453368-7	SWITCH KNOB		1			
046	453369-5	PIN CAP		1			
047	234057-1	COMPRESSION SPRING 8		1			
048	266361-0	TAPPING SCREW 4X30		4	*		
048-1	265B70-0	TAPPING SCREW 4X30	O	4			
049	213032-0	O RING 4		1	*		
049-1	213960-9	O RING 5	O	1			
050	256535-1	SHOULDER PIN 6		1			
051	263002-9	RUBBER PIN 4		1			
052	210006-2	BALL BEARING 696ZZ		1			
053	961005-4	RETAINING RING S-9		1			
054	253180-3	FLAT WASHER 10		1			
055	310508-9	JOINT SLEEVE		1	*		
055-1	310577-0	JOINT SLEEVE	<	1	*		
055-2	310683-1	JOINT SLEEVE	<	1			
056	346556-2	C TYPE PLATE		1			
057	227594-2	SPIRAL BEVEL GEAR 41		1			
058	313228-4	COUPLING		1			
059	210302-8	BALL BEARING 6903ZZ		1			
060	253744-3	FLAT WASHER 12		1			
061	263002-9	RUBBER PIN 4		1			
062	213641-5	O RING 51		1			
063	318837-4	BEARING BOX		1	*		
063-1	136012-8	BEARING BOX ASSEMBLY	<	1			
063-1		INC. 61.62					
064	265490-6	HEX. SOCKET HEAD BOLT M4X16		4			
065	211129-9	BALL BEARING 6201DDW		1			
066	267279-8	FLAT WASHER 21		1			
067	443124-3	FELT RING 17		1			
068	285854-8	BEARING RETAINER 20-33		1			
070	326130-2	SPINDLE		1			
072	123146-6	TOOLLESS WHEELCOVER 150AK ASSY		1	*		
C10	213009-5	O RING 4		1	*		
C20	265180-1	PAN HEAD SCREW M5X16		1	*		
072-1	141P37-5	TOOLLESS WHEEL COVER 150AK CMP	<	1	*		
C10	213009-5	O RING 4		1	*		
C20	265180-1	PAN HEAD SCREW M5X16		1	*		
C30	8050A1-8	CAUTION LABEL		1	*		
072-2	123146-6	TOOLLESS WHEELCOVER 150AK ASSY	<	1	*		

C10	213009-5	O RING 4		1	*		
C20	265180-1	PAN HEAD SCREW M5X16		1	*		
072-3	141P37-5	TOOLLESS WHEEL COVER 150AK CMP	<	1			
C10	213009-5	O RING 4		1	*		
C20	265180-1	PAN HEAD SCREW M5X16		1			
C30	8050A1-8	CAUTION LABEL		1			
073	122444-5	INNER FLANGE 47 ASS'Y		1			
074	224554-5	LOCK NUT 14-45		1			
075	135556-5	COUPLING ASS'Y		1			
075		INC. 57-59					
076	804Y42-4	CLEAR LABEL		1	*		
A01	162258-0	VIBRATION PROOF GRIP		1			
A02	782407-9	LOCK NUT WRENCH 35		1	*		
A02-1	197610-3	LOCK NUT WRENCH 35 SET	O	1	*		
A02-2	782423-1	LOCK NUT WRENCH 35	O	1			
A03	A-80846	DEPRESSED CENTER WHEEL 150X 36		1			
A04	191V56-7	CUTTING W.C.A. 150 SET		1	*		
A05	191V56-7	CUTTING W.C.A. 150 SET		1			
F02	194514-0	VIBRATION PROOF GRIP SET		1			
F05-1	198719-4	DUST COVER ATTACHMENT SET	<	1			