Model No.GA6021 DISC GRINDER 150MM

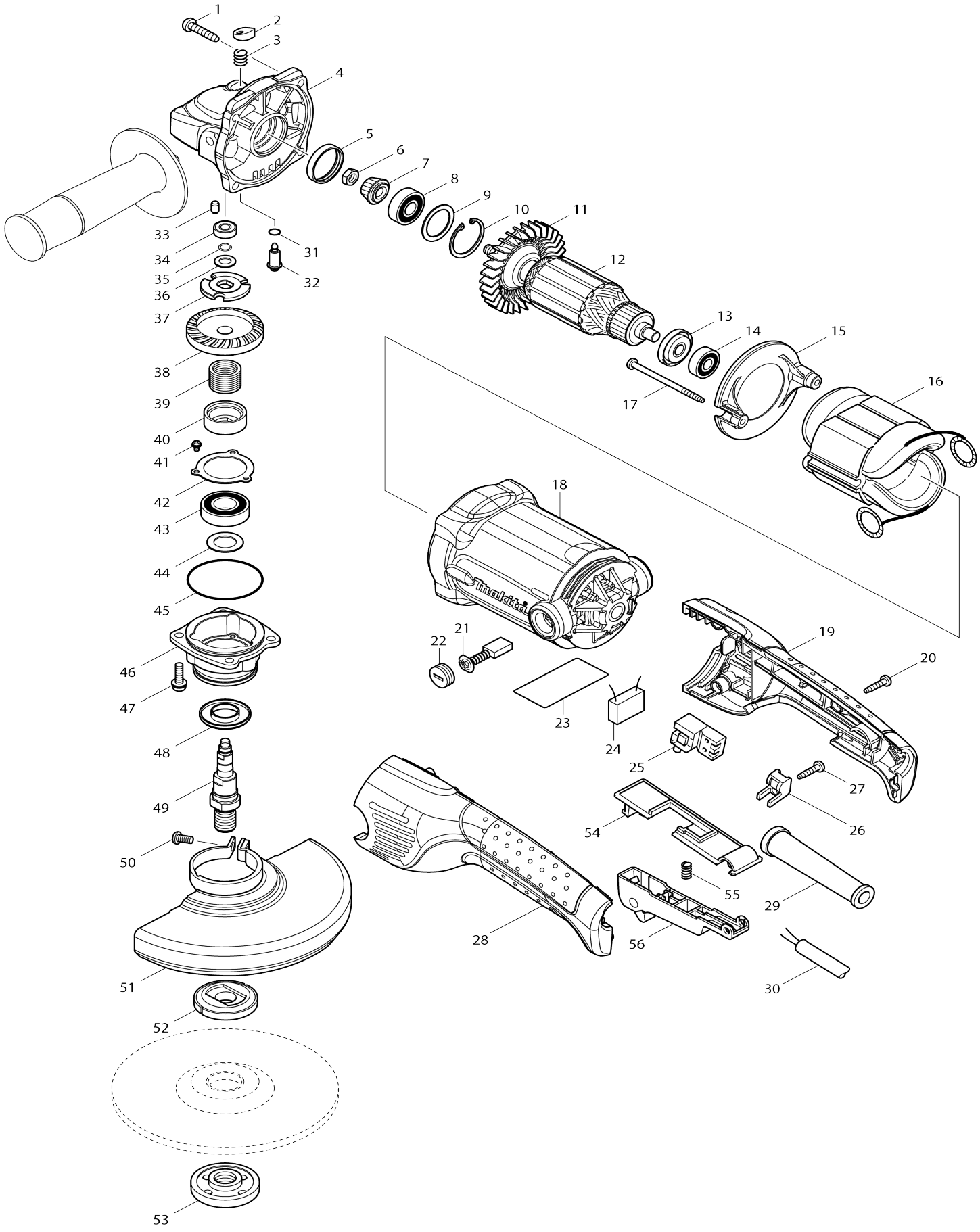

Model No.GA6021 DISC GRINDER 150MM

Item No.	Parts No.	Description	Interchangeability	Q'ty	New/ Old	Note1	Note2
001	266041-8	TAPPING SCREW 5X25		4	*		
001-1	266459-3	TAPPING SCREW 5X25	O	4			
002	417771-6	PIN CAP		1			
003	234057-1	COMPRESSION SPRING 8		1			
004	318158-4	GEAR HOUSING		1			
005	262132-3	RUBBER RING 27		1			
006	264010-3	HEX.NUT M7		1			
007	227520-1	SPIRAL BEVEL GEAR 11		1			
008	211088-7	BALL BEARING 6000DDW		1	*		
008-1	210059-1	BALL BEARING 6000DDW	<	1			
009	267352-4	FLAT WASHER 22		1			
010	962107-9	RETAINING RING (INT) R-30		1			
011	240094-5	FAN 70		1			
012	513704-0	ARMATURE ASS'Y 240V		1	*		
D10		INC. 11,13,14					
012-1	510132-0	ARMATURE ASS'Y 240V	O	1			
D10		INC. 11,13,14					
013	681644-1	INSULATION WASHER		1			
014	210005-4	BALL BEARING 608DDW		1			
015	419961-7	BAFFLE PLATE		1			
016	525803-6	FIELD ASS'Y 220-240V		1			
C10	654020-2	RING TERMINAL		2			
C20	654555-3	CONNECTOR 34130		2			
017	266340-8	TAPPING SCREW 4X65		2			
018	158278-0	MOTOR HOUSING COMPLETE		1			
C10	643708-9	BRUSH HOLDER 5-11		2			
019	188462-3	HANDLE SET		1			
D10		INC. 28					
020	266326-2	TAPPING SCREW 4X18		4	*		
020-1	265A48-7	TAPPING SCREW 4X18	O	4			
021	191963-2	CARBON BRUSH CB-303		1	*		
021-1	194996-6	CARBON BRUSH SET CB-303	O	1			
022	643750-0	BRUSH HOLDER CAP 7-11		2			
023	864775-3	GA6021 NAME PLATE		1			
024	645200-1	NOISE SUPPRESSOR		1			
025	651922-3	SWITCH TG71B		1	*		
025-1	650677-7	SWITCH C3PA-1112	<	1	*		
025-2	651922-3	SWITCH TG71B	<	1			
026	687260-7	STRAIN RELIEF		1			
027	266326-2	TAPPING SCREW 4X18		1	*		
027-1	265A48-7	TAPPING SCREW 4X18	O	1			
028	188462-3	HANDLE SET		1			
D10		INC. 19					
029	682505-8	CORD GUARD 10-90		1			
030	665865-3	POWER SUPPLY CORD 1.0-2-2.5		1			
031	213977-2	O RING 7		1			
032	256505-0	SHOULDER PIN 5		1			

033	263002-9	RUBBER PIN 4		1			
034	210006-2	BALL BEARING 696ZZ		1			
035	233926-3	RING SPRING 7		1			
036	253835-0	FLAT WASHER 8		1			
037	267811-8	LOCK WASHER		1			
038	227522-7	SPIRAL BEVEL GEAR 35B		1			
039	233957-2	LOCK SPRING 16		1	*		
039-1	234356-1	LOCK SPRING 16	<	1			
040	324833-2	LOCK SLEEVE		1			
041	911003-8	PAN HEAD SCREW M3X6		3			
042	285728-3	BEARING RETAINER 39		1			
043	211236-8	BALL BEARING 6002DDW		1			
044	253853-8	FLAT WASHER 15		1			
045	213624-5	O RING 48		1			
046	318160-7	BEARING BOX		1	*		
046-1	318299-6	BEARING BOX	<	1	*		
046-2	318332-4	BEARING BOX	S	1			
047	265131-4	PAN HEAD SCREW M5X18		4			
048	345464-4	LABYRINTH RING		1			
049	324789-9	SPINDLE		1			
050	265180-1	PAN HEAD SCREW M5X16		1			
051	135192-7	WHEEL COVER 150 ASSEMBLY		1	*		
D10		INC. 50					
051-1	135241-0	WHEEL COVER 150K ASSEMBLY	S	1	*		
D10		INC. 50					
051-2	122888-9	WHEEL COVER 150K ASSEMBLY	<	1	*		
C10	213009-5	O RING 4		1	*		
D10		INC. 50					
051-3	123230-7	WHEEL COVER 150AK ASSEMBLY	<	1	*		
C10	213009-5	O RING 4		1	*		
D10		INC. 50					
051-4	141P29-4	WHEEL COVER 150AK COMPLETE	<	1			
C10	213009-5	O RING 4		1	*		
C20	8050A1-8	CAUTION LABEL		1			
D10		INC. 50					
052	224415-9	INNER FLANGE 42		1			
053	224554-5	LOCK NUT 14-45		1			
054	418519-9	SWITCH BASE		1			
055	233117-6	COMPRESSION SPRING 6		1			
056	158401-7	SWITCH LEVER A COMPLETE		1	*		
056-1	158402-5	SWITCH LEVER B COMPLETE	<	1			
057	819282-1	CLEAR LABEL		1			
A01	153504-2	GRIP 36 COMPLETE		1			
A02	782423-1	LOCK NUT WRENCH 35		1			
F04	192227-7	SUPER FLANGE		1			
F24	194483-5	LOOP HANDLE SET		1			
F25	194514-0	VIBRATION PROOF GRIP SET		1			
F26	193956-5	DUST COVER ATTACHMENT		1			