Model No.GA5092 Angle Grinder

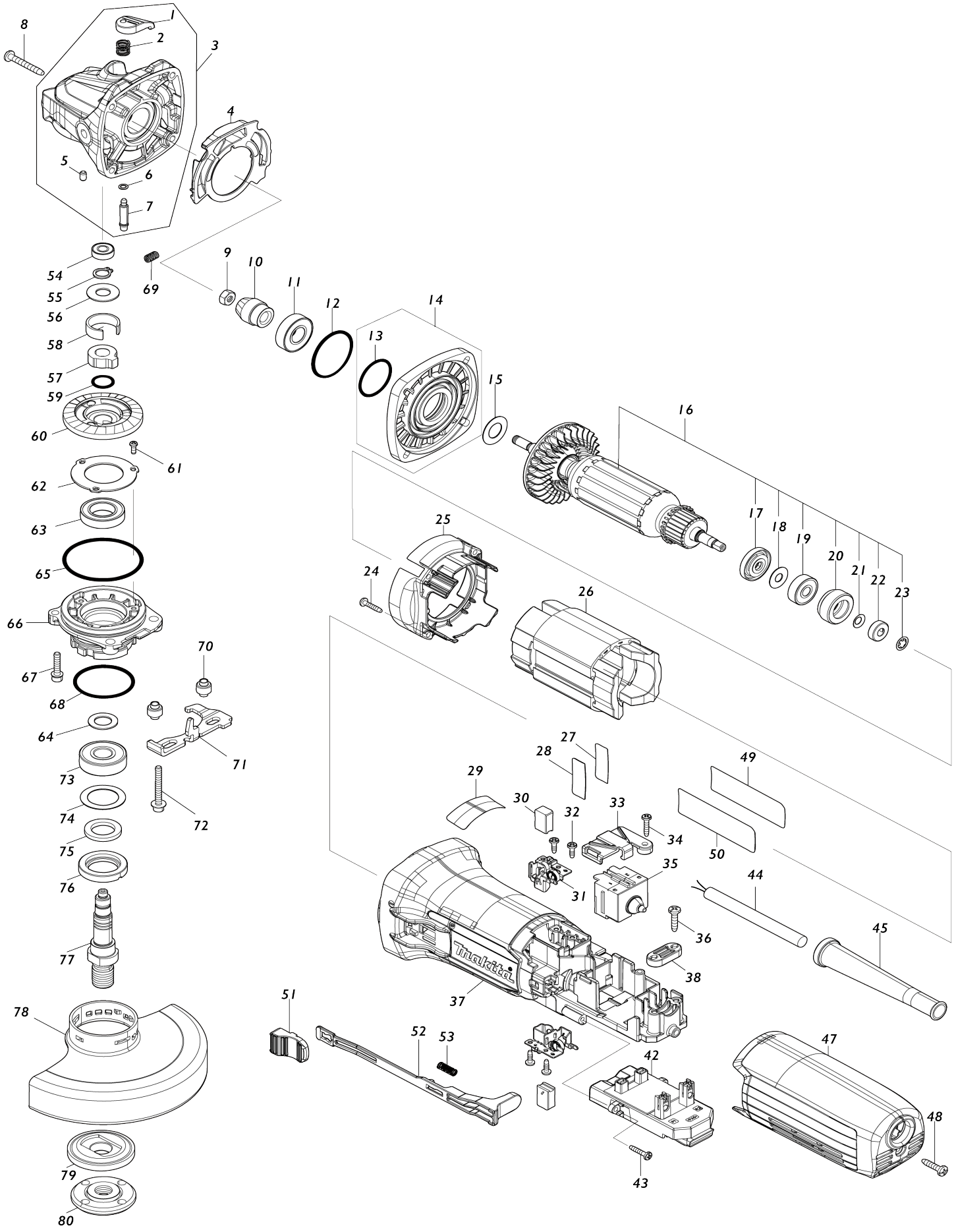

Model No.GA5092 Angle Grinder

Item No.	Parts No.	Description	Interchangeability	Q'ty	New/ Old	Note1	Note2
001	453369-5	Pin cap		1			
002	234057-1	Compression spring 8		1			
003	136770-6	Gear housing assembly		1			
003		INC.1,2,5-7					
004	413C06-1	Diffuser		1			
005	263002-9	Rubber pin 4		1			
006	213032-0	O-ring 4		1	*		
006-1	213960-9	O-ring 5	O	1			
007	256535-1	Shoulder pin 6		1			
008	266361-0	Binding head tapping screw 4X30		4			
009	252186-8	Hex. nut M6		1			
010	227916-6	Spiral bevel gear 11		1			
011	211131-2	Ball bearing 6001DDW		1			
012	422812-5	Rubber plate		1			
013	213693-6	O-ring 27.5		1			
014	136771-4	Gear housing cover assembly		1			
014		INC. 13					
015	253084-9	Flat washer 12		1			
016	511A49-6	Armature assembly 240V		1			
016		INC. 17-23					
017	681656-4	Insulation washer		1			
018	253823-7	Flat washer 7		1			
019	210027-4	Ball bearing 627DDW		1			
020	422811-7	Labyrinth rubber ring 22		1			
021	267756-0	Wave washer 6		1			
022	688117-5	Magnet sleeve		1			
023	259039-2	Self lock 6		1			
024	266429-2	Binding head tapping screw 3X16		4			
025	413C07-9	Baffle plate A		1			
026	621968-3	Field		1			
027	807G78-4	Clear label		1	*		
028	858N57-7	Serial No. label GA5092		1			
029	898443-6	SJS2 mark label		1	*		
030	1910M3-7	Carbon brush set 264		1			
031	644011-1	Brush holder		2			
032	266007-8	Binding head tapping screw 3X10		4			
033	413G29-3	Switch cover		1			
034	266429-2	Binding head tapping screw 3X16		1			
035	650028-4	Switch FPC-2115T-0-02		1			
036	266326-2	Binding head tapping screw 4X18		2	*		
036-1	265B67-9	Binding head tapping screw 4X18	O	2			
037	413C09-5	Motor housing A		1			
038	687124-5	Strain relief		1			

042	620H23-6	Controller		1			
043	266429-2	Binding head tapping screw 3X16		2			
044	665890-4	Power supply cord 1.0-2-4.0		1			
045	682117-7	Cord guard		1			
047	413C02-9	Rear cover C		1			
048	266326-2	Binding head tapping screw 4X18		1	*		
048-1	265B67-9	Binding head tapping screw 4X18	O	1			
049	8055D2-7	Clear label		1	*		
050	858N53-5	Name plate GA5092		1			
051	413C10-0	Switch knob A		1			
052	413C03-7	Switch lever		1			
053	233121-5	Compression spring 4		1			
054	210026-6	Ball bearing 696ZZ		1			
055	961006-2	Retaining ring (EXT) S-10		1			
056	253180-3	Flat washer 10		1			
057	327918-3	Joint sleeve		1			
058	347911-1	C type plate		1			
059	213122-9	O-ring 12		1			
060	227917-4	Spiral bevel gear 38		1			
061	265199-0	Pan head screw M3X8		3			
062	285048-5	Bearing retainer 27-46		1			
063	210302-8	Ball bearing 6903ZZ		1			
064	253744-3	Flat washer 12		1			
065	213641-5	O-ring 51		1			
066	312C10-6	Bearing box A		1			
067	266948-8	Hex. socket head bolt M4X20 WR		2			
068	213789-3	O-ring 38		1	*		
068-1	262211-7	Rubber ring 37	<	1	*		
068-2	213789-3	O-ring 38	<	1			
069	232490-1	Compression spring 4		1			
070	327322-6	Sleeve 4		2			
071	347909-8	Lever A		1			
072	265C21-9	Hex. socket head bolt M4X35 WG		2			
073	211129-9	Ball bearing 6201DDW		1			
074	267279-8	Flat washer 21		1			
075	443124-3	Felt ring 17		1			
076	285854-8	Bearing retainer 20-33		1			
077	327916-7	Spindle		1			
078	141L54-1	Wheel cover 125 complete		1	*		
C10	8050A1-8	Caution label		1	*		
078-1	141P46-4	Wheel cover 125 complete	<	1			
C10	8050A1-8	Caution label		1			
079	224490-5	Inner flange 14-45		1			
080	224485-8	Lock nut 14-45		1			
A01	A-80656	GRINDING WHEEL 125 WA36N		1			
A02	199710-5	Cutting wheel cover attachment 125 set		1			
A03	162258-0	Vibration proof grip		1			
A04	782034-2	Lock nut wrench 35		1	*		
A04-1	782423-1	Lock nut wrench 35	O	1			

F01	191G06-2	Dust collect cover set 125mm		1			
F02	191V72-9	Dust cover attachment set		1			
F03	191W05-0	Dust cover set 115/125mm		1			
C10	743129-6	Brush A		1			
C20	743130-1	Brush B		1			
F04	1910X5-0	Grip 35 set		1			
F05	1910X6-8	Grip 35 set		1			
F07	1910Y0-7	Wheel cover 125C set		1			
F09	192227-7	Inner flange 47 set		1			
F11	194514-0	Vibration proof grip set		1			
F12	195354-9	Toolless lock nut set		1			
F24	1919G1-3	CHAMFERING D.C.A. SET		1			

Please state Parts No. when your order.

Print Date 08/28/2026