Model No.GA5050R Angle Grinder

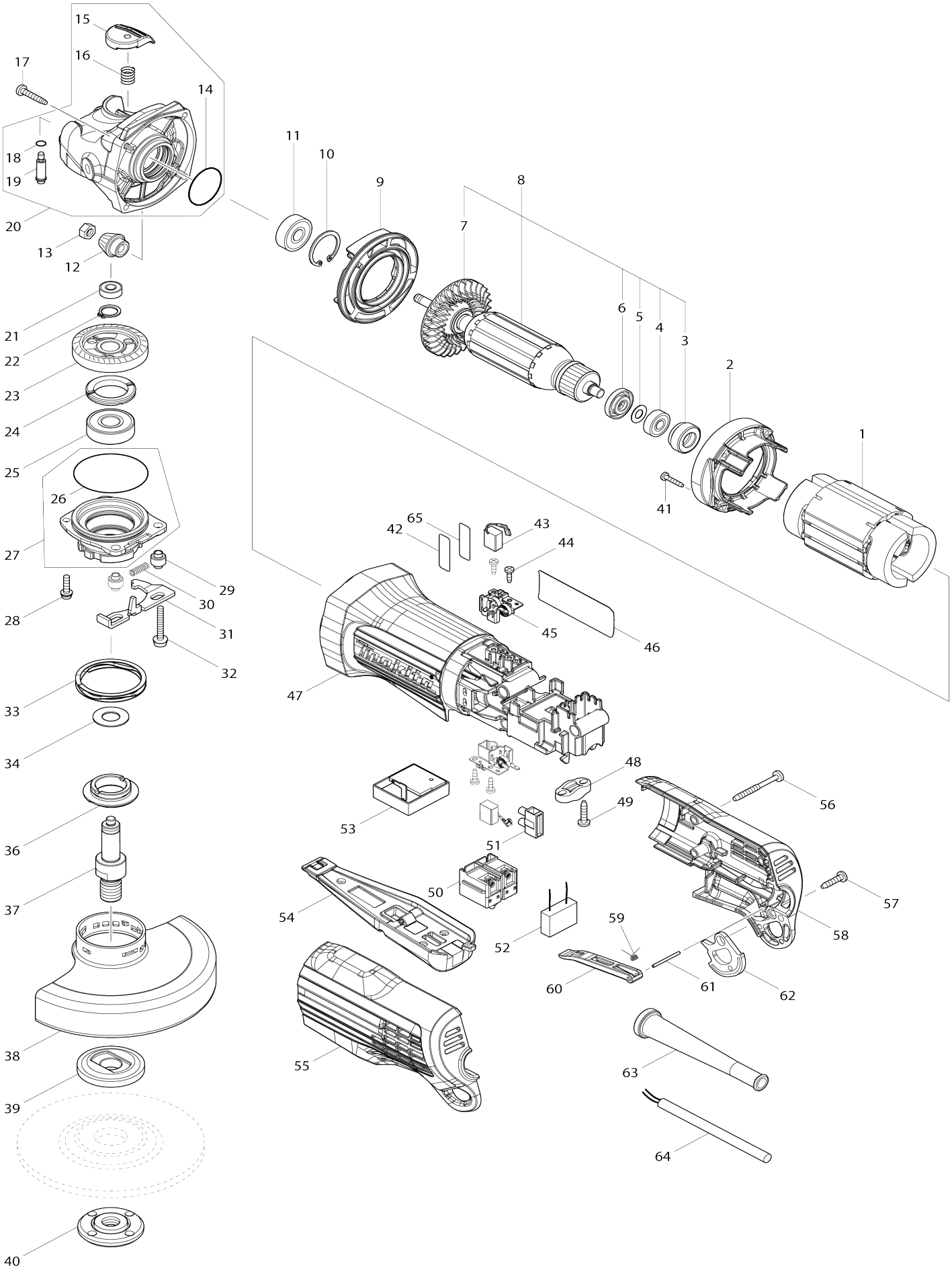

Model No.GA5050R Angle Grinder

Item No.	Parts No.	Description	Interchangeability	Q'ty	New/ Old	Note1	Note2
001	634734-9	Field		1			
002	459003-5	Baffle plate		1			
003	422413-9	Rubber ring 19		1			
004	210017-7	Ball bearing 607DDW		1			
005	253186-1	Flat washer 7		1			
006	681636-0	Insulation washer		1			
007	240197-5	Fan 60		1			
008	518359-6	Armature assembly 220V		1			
008		INC. 3-7					
009	459004-3	Diffuser		1			
010	962105-3	Retaining ring (INT) R-26		1			
011	211092-6	Ball bearing 629DDW		1			
012	226858-1	Spiral bevel gear 10		1			
013	252186-8	Hex. nut M6		1			
014	213407-3	O-ring 26		1			
015	459006-9	Pin cap		1			
016	232491-9	Compression spring 9		1			
017	266324-6	Binding head tapping screw 4X22		4	*		
017-1	265B46-7	Tapping screw 4X22	O	4			
018	213877-6	O-ring 6		1			
019	256594-5	Shoulder pin 6		1			
020	136144-1	Gear housing B assembly		1			
C10	263002-9	Rubber pin 4		1			
020		INC. 14-16,18,19					
021	210033-9	Ball bearing 696ZZ		1			
022	961052-5	Retaining ring (EXT) S-12		1			
023	226859-9	Spiral bevel gear 37		1			
024	285039-6	Bearing retainer 23-33		1			
025	211129-9	Ball bearing 6201DDW		1			
026	213624-5	O-ring 48		1	*		
026-1	213624-5	O-ring 48	O	1			
027	136141-7	Bearing box A assembly		1			
027		INC. 26			*		
027		INC. 26,66					
028	911128-8	Pan head screw M4X16 WR		2			
029	327322-6	Sleeve 4		2			
030	232490-1	Compression spring 4		1			
031	347475-5	Lever		1			
032	911159-7	Pan head screw M4X30 WG		2			
033	232542-8	Coiled wave spring 41		1	*		
034	267238-2	Flat washer 12		1			
036	319789-2	Plate retainer 20		1			
037	327241-6	Spindle		1			
038	347480-2	Wheel cover 125		1	*		
038-1	141P46-4	Wheel cover 125 complete	<	1			
C10	8050A1-8	Caution label		1			
039	224490-5	Inner flange 14-45		1			

040	224485-8	Lock nut 14-45		1			
041	266429-2	Binding head tapping screw 3X16		4	*		
041-1	266130-9	Binding head tapping screw 3X16	O	4			
042	856E56-9	Serial No. label GA5050R		1			
043	191D85-2	Carbon brush set CB-260		1			
044	266007-8	Binding head tapping screw 3X10		4			
045	643541-9	Brush holder		2			
046	856E54-3	Name plate GA5050R		1			
047	458999-7	Motor housing		1			
048	687124-5	Strain relief		1			
049	266326-2	Binding head tapping screw 4X18		2	*		
049-1	265B67-9	Binding head tapping screw 4X18	O	2			
050	650579-7	Switch 1246.3223		1	*		
050-1	651396-8	Switch FPC-2115S-0-03	<	1			
051	654532-5	Terminal block 1P		2			
052	645190-8	Noise suppressor		1			
053	620951-7	Controller		1			
054	162540-7	Switch lever complete		1			
C10	231679-8	Torsion spring 2		1			
C20	459007-7	Lock off lever		1	*		
C21	412971-3	Lock off lever	<	1			
C30	951019-1	Spring pin 2-20		1			
055	183M68-0	Rear cover set		1			
055		INC. 58					
056	266048-4	Binding head tapping screw 4X40		3	*		
056-1	266560-4	Binding head tapping screw 4X40	O	3			
057	266326-2	Binding head tapping screw 4X18		1	*		
057-1	265B67-9	Binding head tapping screw 4X18	O	1			
058	183M68-0	Rear cover set		1			
058		INC. 55					
059	232492-7	Torsion spring 2		1			
060	459005-1	Switch link lever		1			
061	256595-3	Pin 2		1			
062	347476-3	Strap ring		1			
063	682559-5	Cord guard 8		1			
064	665394-6	Power supply cord 1.0-2-2.5		1			
066	213789-3	O-ring 38		1			
A01	158237-4	Grip 36 complete		1			
A02	782423-1	Lock nut wrench 35		1			
A04	199710-5	Cutting wheel cover attachment 125 set		1			
F02	199710-5	Cutting wheel cover attachment 125 set		1			
F03	192227-7	Inner flange 47 set		1			
F04	191819-9	Wire cup brush 90 set		1	*		
F05	194514-0	Vibration proof grip set		1			

F06	195354-9	Toolless lock nut set		1			
F17	191G06-2	Dust collect cover set 125mm		1			
F19	191W05-0	Dust cover set 115/125mm		1			
C10	743129-6	Brush A		1			
C20	743130-1	Brush B		1			
F20	1919G1-3	CHAMFERING D.C.A. SET		1			

Please state Parts No. when your order.

Print Date 08/28/2026