Model No.GA5080R Angle Grinder

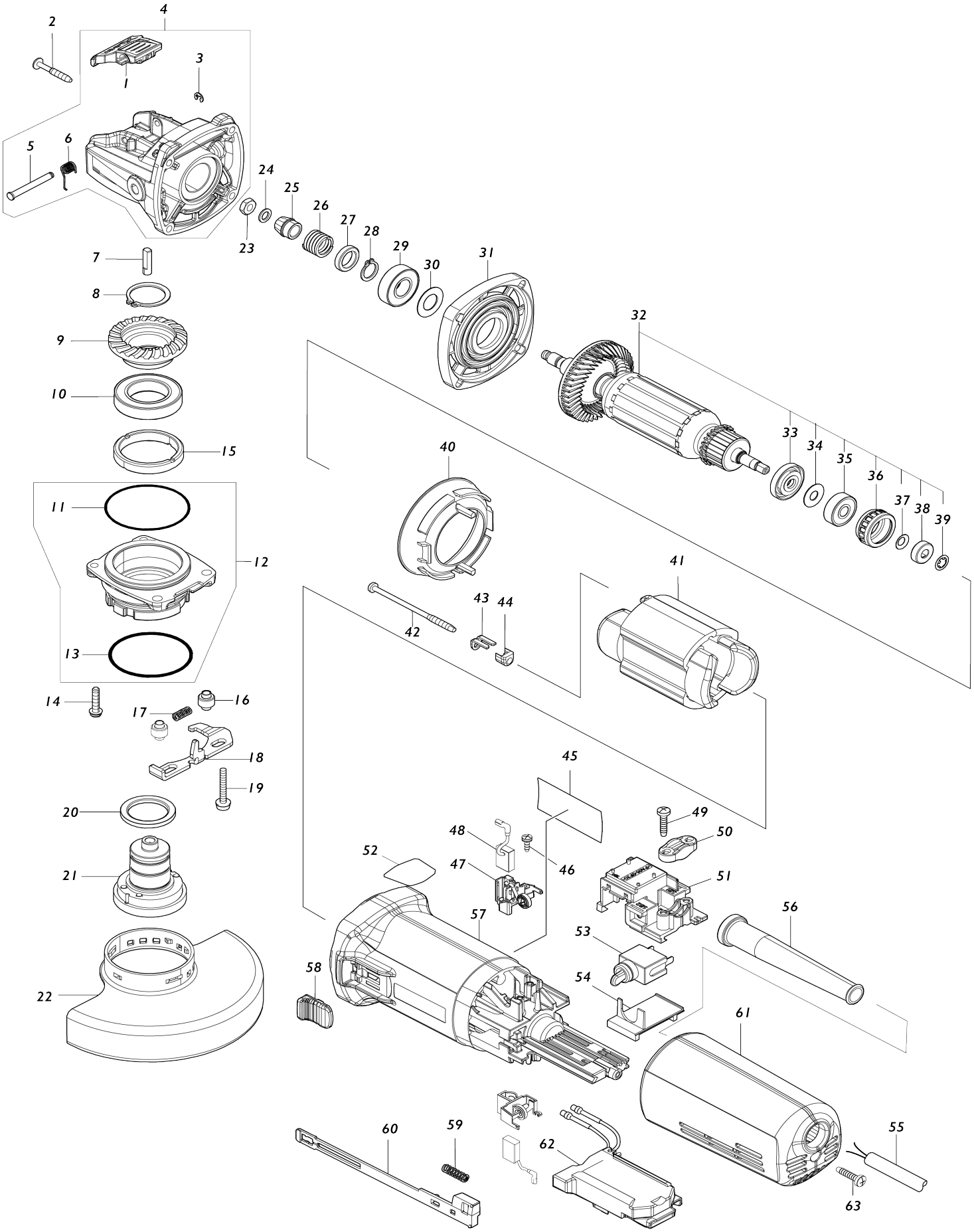

Model No.GA5080R Angle Grinder

Item No.	Parts No.	Description	Interchangeability	Q'ty	New/ Old	Note1	Note2
001	459967-3	Lever		1			
002	266257-5	Binding head tapping screw 4X28		4			
003	961017-7	Stop ring (EXT) E-3		1			
004	136441-5	Gear housing assembly		1			
004		INC. 1,3,5,6					
005	256935-5	Headed pin 4		1			
006	232576-1	Torsion spring 5		1			
007	327460-4	Shaft		1			
008	961104-2	Retaining ring (EXT) S-24		1			
009	227897-4	Spiral bevel gear 38		1			
010	210208-0	Ball bearing 6905DDW		1			
011	213A03-3	O-ring 50		1	*		
011-1	213A03-3	O-ring 50	O	1			
012	136446-5	Bearing box assembly		1			
012		INC. 11,13					
013	213783-5	O-ring 48		1			
014	911138-5	Pan head screw M4X20 WR		2			
015	285045-1	Bearing retainer 36-43		1			
016	327322-6	Sleeve 4		2			
017	232490-1	Compression spring 4		1			
018	347615-5	Lever		1			
019	911159-7	Pan head screw M4X30 WG		2			
020	327459-9	Ring 25		1			
021	127428-8	Spindle assembly		1			
022	347618-9	Wheel cover 125		1	*		
022-1	141L27-4	Wheel cover 125 complete	<	1			
C10	8050A1-8	Caution label		1			
023	931303-0	Hex. nut M6		1			
024	253077-6	Flat washer 6		1			
025	227896-6	Spiral bevel gear 11		1			
026	233901-9	Lock spring 12		1			
027	257010-0	Ring 12		1			
028	961052-5	Retaining ring (EXT) S-12		1			
029	211142-7	Ball bearing 6001LLB		1			
030	253084-9	Flat washer 12		1			
031	317359-1	Gear housing cover		1			
032	511A19-5	Armature assembly 220-240V		1	*		
C10	240033-5	Fan 57		1	*		
032		INC. 33-39			*		
032-1	510515-4	Armature assembly 220-240V	<	1			
C10	240033-5	Fan 57		1			
032-1		INC. 33-39					
033	681656-4	Insulation washer		1			
034	253823-7	Flat washer 7		1			
035	210027-4	Ball bearing 627DDW		1			
036	421738-8	Labyrinth rubber ring 22		1	*		
036-1	422750-1	Labyrinth rubber ring 22	<	1			

037	267756-0	Wave washer 6		1			
038	688117-5	Magnet sleeve		1			
039	259039-2	Self lock 6		1			
040	413076-2	Baffle plate		1			
041	626503-2	Field 220-240V		1	*		
041-1	621C19-0	Field	S	1			
042	266258-3	Binding head tapping screw 4X70		2			
043	344871-8	Retainer		2			
044	417237-6	Insulation cover		2	*		
045	811K73-2	Name plate GA5080R		1			
046	266256-7	Binding head tapping screw 3X10		4			
047	643516-8	Brush holder		2			
048	191978-9	Carbon brush set CB-318		1			
049	265995-6	Binding head tapping screw 4X18		2			
050	687124-5	Strain relief		1			
051	638635-3	Switch block		1			
052	813900-3	SJS mark label		1	*		
053	651418-4	Switch ST115A-40		1	*		
053-1	651418-4	Switch ST115A-40	O	1			
054	687113-0	Cover		1			
055	665865-3	Power supply cord 1.0-2-2.5		1			
056	682566-8	Cord guard 10		1			
057	453276-2	Motor housing		1	*		
057-1	4138R3-3	MOTOR HOUSING	<	1			
058	417813-6	Switch knob		1			
059	233071-4	Compression spring 4		1			
060	417186-7	Switch lever		1	*		
060-1	453847-5	Switch lever	O	1			
061	417185-9	Rear cover		1			
062	631841-9	Controller		1	*		
062-1	620G01-0	Controller	<	1			
063	265995-6	Binding head tapping screw 4X18		1			
A01	153489-2	Grip 36 complete		1			
A02	E-00402	GRINDING WHEEL INOX 125 X-LOCK		1			
A03	193903-6	Dust cover attachment set		1			
C10	418420-8	Dust cover attachment C		1			
C20	418421-6	Dust cover attachment A		1			
C30	418422-4	Dust cover attachment B		1			
A08	199710-5	Cutting wheel cover attachment 125 set		1			
F01	199710-5	Cutting wheel cover attachment 125 set		1			
F02	191G05-4	Dust collect cover set 125mm		1			
F04	194514-0	Vibration proof grip set		1			
F05	196880-1	Brush set		1			