Model No.GA5041C Angle Grinder

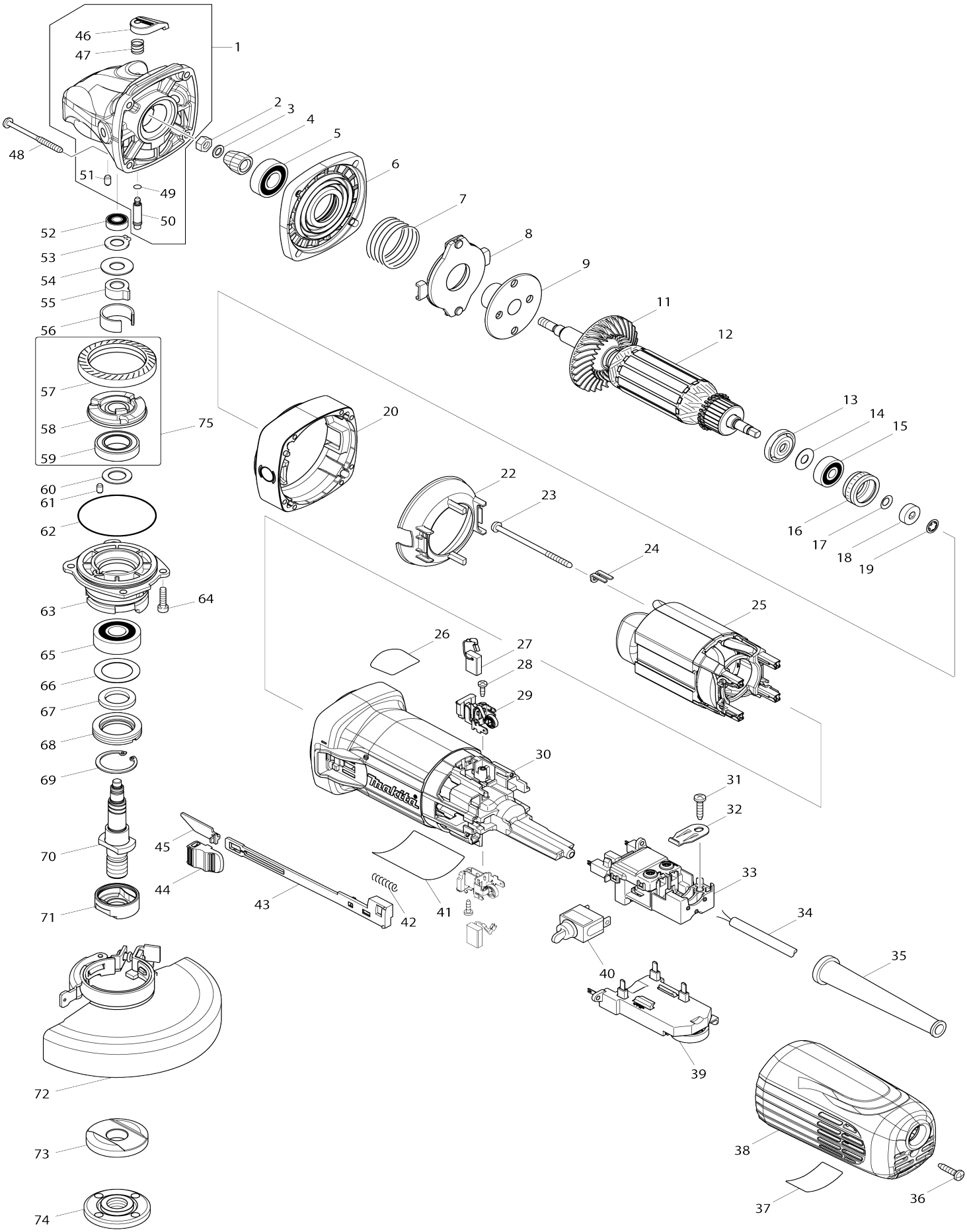

Model No.GA5041C Angle Grinder

Item No.	Parts No.	Description	Interchangeability	Q'ty	New/ Old	Note1	Note2
001	168705-9	Gear housing complete		1	*		
001-1	319310-7	Gear housing	<	1	*		
001-2	136013-6	Gear housing assembly	<	1	*		
001-2		INC. 46,47,49-51			*		
001-3	136013-6	Gear housing assembly	O	1			
001-3		INC. 46,47,49-51					
002	252186-8	Hex. nut M6		1			
003	253077-6	Flat washer 6		1			
004	227591-8	Spiral bevel gear 10		1			
005	211142-7	Ball bearing 6001LLB		1			
006	141981-0	Gear housing cover complete		1	*		
006-1	141981-0	Gear housing cover complete	O	1			
007	234230-3	Compression spring 33		1			
008	141515-9	Brake shoe holder complete		1			
009	326132-8	Brake plate		1	*		
011	240135-7	Fan 60B		1	*		
012	515378-3	Armature assembly 220-240V		1	*		
012		INC. 11,13-15			*		
012-1	515398-7	Armature assembly 220-240V	X	1			
012-1		INC. 13-15					
013	681656-4	Insulation washer		1			
014	253823-7	Flat washer 7		1			
015	210027-4	Ball bearing 627DDW		1			
016	421738-8	Labyrinth rubber ring 22		1	*		
016-1	422750-1	Labyrinth rubber ring 22	<	1			
017	267756-0	Wave washer 6		1			
018	688117-5	Magnet sleeve		1			
019	259039-2	Self lock 6		1			
020	453374-2	Spacer		1	*		
020-1	455351-0	Spacer	<	1			
022	453375-0	Baffle plate B		1			
023	266258-3	Binding head tapping screw 4X70		2			
024	344871-8	Retainer		2			
025	626653-3	Field 220-240V		1			
026	898443-6	SJS2 mark label		1	*		
027	191978-9	Carbon brush set CB-318		1			
028	266007-8	Binding head tapping screw 3X10		2			
029	643769-9	Brush holder		2	*		
029-1	643770-4	Brush holder	<	2			
030	453376-8	Motor housing B		1			
031	266326-2	Binding head tapping screw 4X18		1	*		
031-1	265B67-9	Binding head tapping screw 4X18	O	1			
032	687169-3	Strain relief		1			
033	638947-4	Switch block		1	*		
033-1	632K98-1	Switch block	<	1			

034	695034-2	Power supply cord 1.0-2-4.0		1			
035	682559-5	Cord guard 8		1			
036	266326-2	Binding head tapping screw 4X18		1	*		
036-1	265B67-9	Binding head tapping screw 4X18	O	1			
037	898444-4	Operation label		1			
038	453365-3	Rear cover C		1			
039	620127-6	Controller		1	*		
039-1	620734-5	Controller	<	1	*		
039-2	620G02-8	Controller	<	1			
040	651418-4	Switch ST115A-40		1	*		
040-1	651418-4	Switch ST115A-40	O	1			
041	897102-9	Name plate GA5041C		1	*		
041-1	897102-9	Name plate GA5041C	<	1			
042	233071-4	Compression spring 4		1			
043	453847-5	Switch lever		1			
044	453377-6	Switch knob B		1			
045	346557-0	Switch plate		1			
046	453369-5	Pin cap		1			
047	234057-1	Compression spring 8		1			
048	266467-4	Binding head tapping screw 4X50		4			
049	213032-0	O-ring 4		1	*		
049-1	213960-9	O-ring 5	O	1			
050	256535-1	Shoulder pin 6		1			
051	263002-9	Rubber pin 4		1			
052	210006-2	Ball bearing 696ZZ		1			
053	961005-4	Retaining ring (EXT) S-9		1			
054	253180-3	Flat washer 10		1			
055	310508-9	Joint sleeve		1	*		
055-1	310577-0	Joint sleeve	<	1	*		
055-2	310683-1	Joint sleeve	<	1			
056	346556-2	C type plate		1			
057	227592-6	Spiral bevel gear 38		1			
058	313228-4	Coupling		1			
059	210302-8	Ball bearing 6903ZZ		1			
060	253744-3	Flat washer 12		1			
061	263002-9	Rubber pin 4		1			
062	213641-5	O-ring 51		1			
063	318839-0	Bearing box B		1			
064	265490-6	Hex. socket head bolt M4X16		4			
065	211129-9	Ball bearing 6201DDW		1			
066	267279-8	Flat washer 21		1			
067	443124-3	Felt ring 17		1			
068	285854-8	Bearing retainer 20-33		1			
069	962105-3	Retaining ring (INT) R-26		1			
070	326133-6	Spindle		1			
071	310514-4	Lead flange		1			
072	123145-8	Toolless wheel cover 125AK assembly		1	*		
C10	213009-5	O-ring 4		1	*		

C20	265180-1	Pan head screw M5X16		1	*		
072-1	141P36-7	Toolless wheel cover 125AK com plete	<	1			
C10	213009-5	O-ring 4		1	*		
C20	265180-1	Pan head screw M5X16		1			
C30	8050A1-8	Caution label		1			
073	224447-6	Inner flange 42B		1			
074	224554-5	Lock nut 14-45		1			
075	135555-7	Coupling assembly		1			
075		INC. 57-59					
076	819357-6	Clear label		1	*		
076-1	804Y42-4	Clear label	<	1	*		
A01	162258-0	Vibration proof grip		1			
A02	782407-9	Lock nut wrench 35		1	*		
A02-1	197610-3	Lock nut wrench 35 set	O	1	*		
A02-2	782423-1	Lock nut wrench 35	O	1			
A03	A-80656	GRINDING WHEEL 125 WA36N		1	*		
A03-1	D-18465	GRINDING WHEEL 125X6 A24R	O	1			
A13	199710-5	Cutting wheel cover attachment 125 set		1			
F02	194514-0	Vibration proof grip set		1			
F03	195354-9	Toolless lock nut set		1			
F05-1	198719-4	Dust cover attachment set	<	1			
F15-1	195239-9	Dust collect cover K set (115/125 MM)	<	1	*		
F17	196880-1	Brush set		1			
F18	196845-3	Dust collect cover K set (125MM)		1			
F22	191W06-8	Dust cover K set 115/125mm		1			
C10	743129-6	Brush A		1			
C20	743130-1	Brush B		1			
F23	1919G1-3	CHAMFERING D.C.A. SET		1			