Model No.GA5050 125MM ANGLE GRINDER

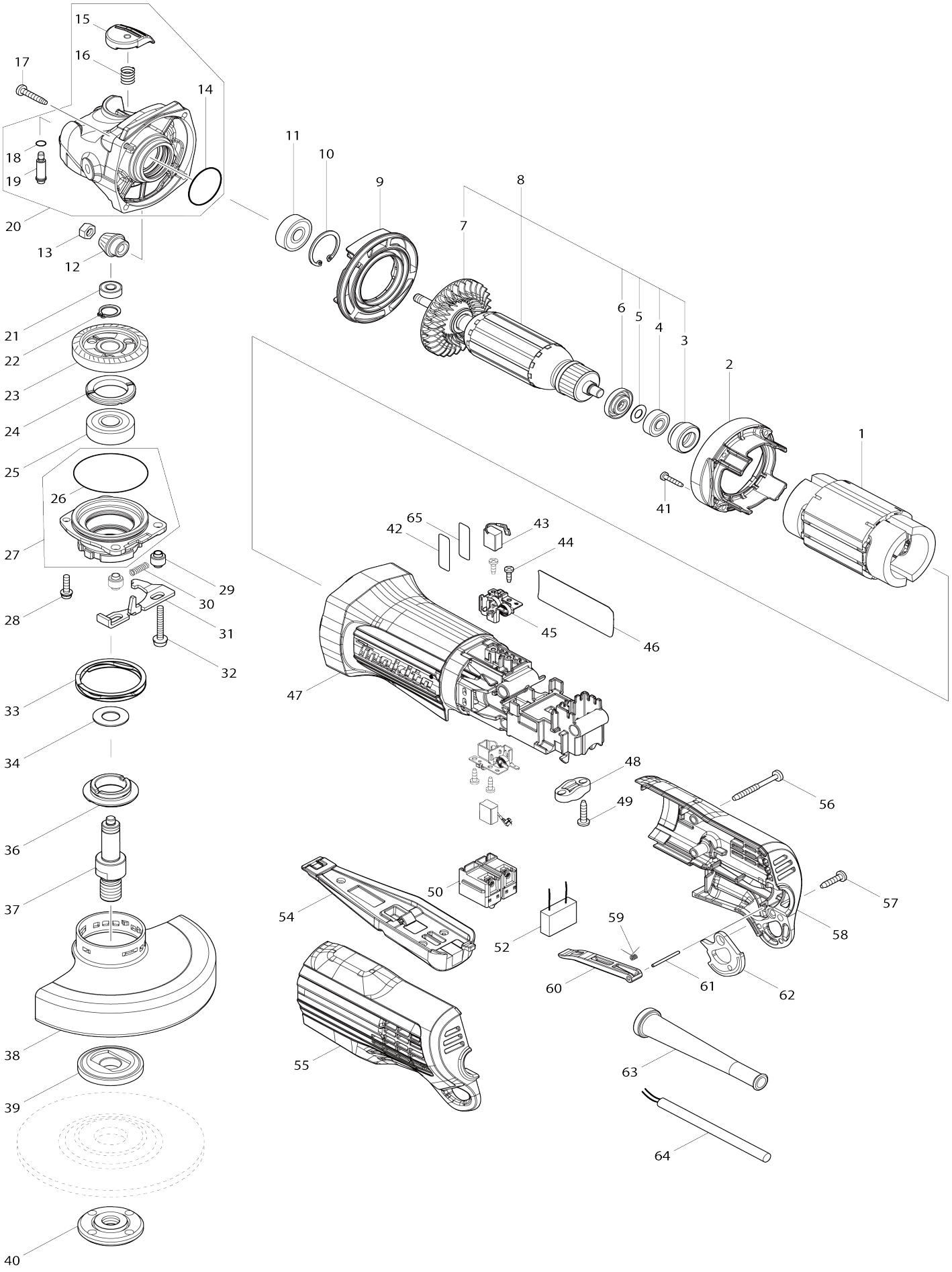

Model No.GA5050 125MM ANGLE GRINDER

Item No.	Parts No.	Description	Interchangeability	Q'ty	New/ Old	Note1	Note2
001	634734-9	FIELD		1			
002	459003-5	BAFFLE PLATE		1			
003	422413-9	RUBBER RING 19		1			
004	210017-7	BALL BEARING 607DDW		1			
005	253186-1	FLAT WASHER 7		1			
006	681636-0	INSULATION WASHER		1			
007	240197-5	FAN60		1			
008	517994-7	ARMATURE ASS'Y 240V		1			
008		INC. 3-7					
009	459004-3	DIFFUSER		1			
010	962105-3	RETAINING RING R-26		1			
011	211092-6	BALL BEARING 629DDW		1			
012	226858-1	SPIRAL BEVEL GEAR 10		1			
013	252186-8	HEX. NUT M6		1			
014	213445-5	O-RING 26		1			
015	459006-9	PIN CAP		1			
016	232491-9	COMPRESSION SPRING 9		1			
017	266324-6	TAPPING SCREW 4X22		4			
018	213877-6	O-RING 6		1			
019	256594-5	SHOULDER PIN 6		1			
020	136144-1	GEAR HOUSING B ASS'Y		1			
C10	263002-9	RUBBER PIN 4		1			
020		INC. 14-16,18,19					
021	210006-2	BALL BEARING 696ZZ		1			
022	961052-5	RETAINING RING (EXT) S-12		1			
023	226859-9	SPIRAL BEVEL GEAR 37		1			
024	285039-6	BEARING RETAINER 23-33		1			
025	211129-9	BALL BEARING 6201DDW		1			
026	213624-5	O RING 48		1	*		
026-1	213624-5	O RING 48	O	1			
027	136141-7	BEARING BOX A ASS'Y		1			
027		INC. 26			*		
027		INC. 26,66					
028	911128-8	P.H.SCREW M4X16 WITH WR		2			
029	327322-6	SLEEVE 4		2			
030	232490-1	COMPRESSION SPRING 4		1			
031	347475-5	LEVER		1			
032	911159-7	PAN HEAD SCREW M4X30		2			
033	232542-8	COILED WAVE SPRING 41		1	*		
034	267238-2	FLAT WASHER 12		1			
036	319789-2	PLATE RETAINER 20		1			
037	327241-6	SPINDLE		1			
038	347480-2	WHEEL COVER 125		1	*		
038-1	141P46-4	WHEEL COVER 125 COMPLETE	<	1			
C10	8050A1-8	CAUTION LABEL		1			
039	224490-5	INNER FLANGE 14-45		1			
040	224485-8	LOCK NUT 14-45		1			

041	266429-2	TAPPING SCREW 3X16		4			
042	856E22-6	GA5050 SERIAL NO. LABEL		1			
043	191D85-2	CARBON BRUSH SET CB-260		1			
044	266007-8	TAPPING SCREW BIND PT 3X10		4			
045	643541-9	BRUSH HOLDER		2			
046	856E20-0	GA5050 NAME PLATE		1			
047	458999-7	MOTOR HOUSING		1			
048	687123-7	STRAIN RELIEF		1			
049	266326-2	TAPPING SCREW 4X18		2			
050	650579-7	SWITCH 1246.3223		1	*		
050-1	651396-8	SWITCH FPC-2115S-0-03	<	1			
054	162540-7	SWITCH LEVER COMPLETE		1			
C10	231679-8	TORSION SPRING 2		1			
C20	459007-7	LOCK OFF LEVER		1	*		
C21	412971-3	LOCK OFF LEVER	<	1			
C30	951019-1	SPRING PIN 2-20		1			
055	183M68-0	REAR COVER SET		1			
055		INC. 58					
056	266048-4	TAPPING SCREW 4X40		3			
057	266326-2	TAPPING SCREW 4X18		1			
058	183M68-0	REAR COVER SET		1			
058		INC. 55					
059	232492-7	TORSION SPRING 2		1			
060	459005-1	SWITCH LINK LEVER		1			
061	256595-3	PIN 2		1			
062	347476-3	STRAP RING		1			
063	682559-5	CORD GUARD 8		1			
064	692021-2	POWER SUPPLY CORD 1.0-2-2.5		1			
065	807G78-4	CLEAR LABEL		1	*		
066	213789-3	O-RING 38		1			
A01	158237-4	GRIP 36 COMPLETE		1			
A02	782423-1	LOCK NUT WRENCH 35		1			
A03	199710-5	CUTTING W.C.A. 125 SET		1			
F03	192227-7	SUPER FLANGE		1			
F05	194514-0	VIBRATION PROOF GRIP SET		1			