Model No.GA4600 Angle Grinder

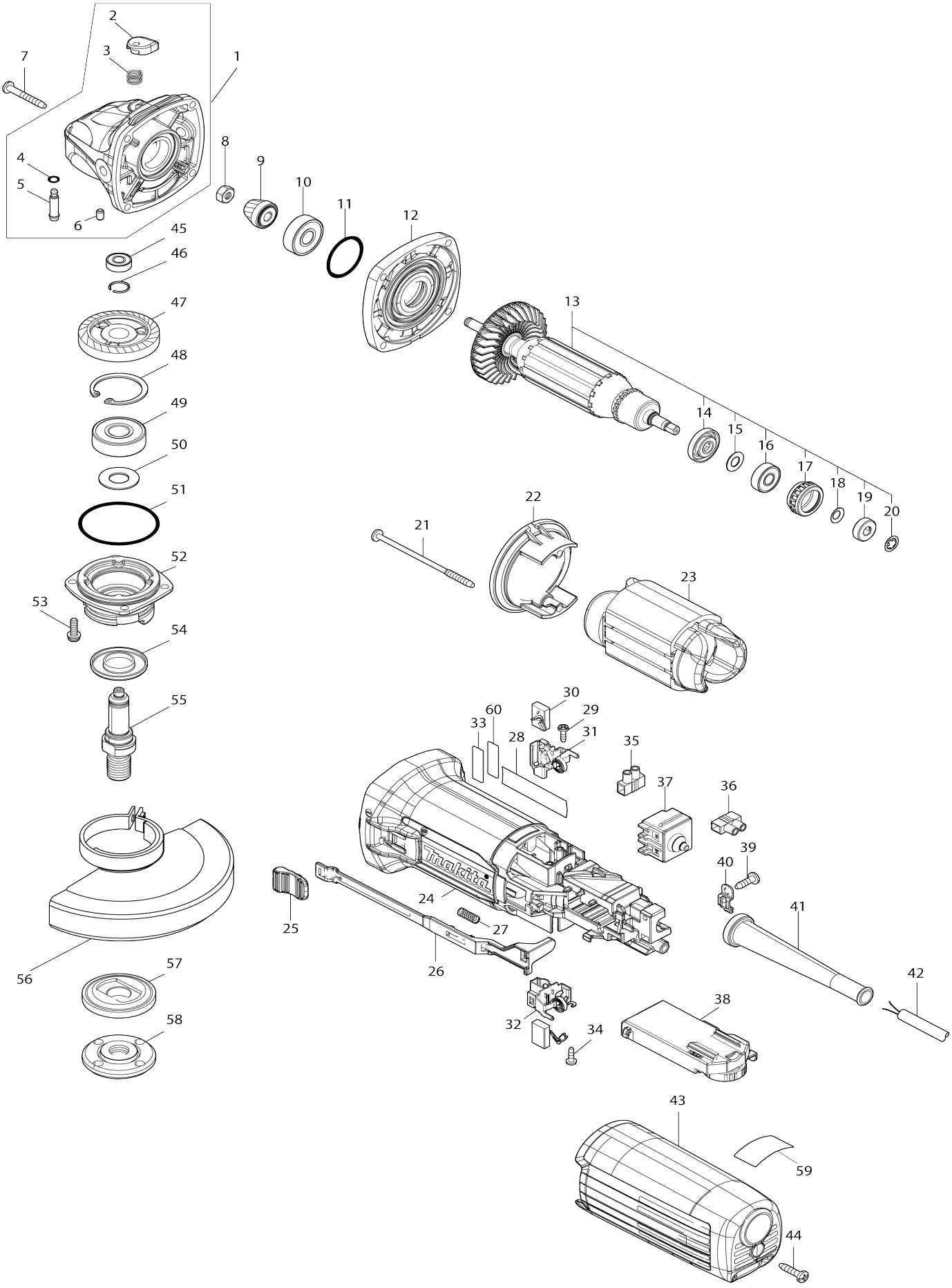

Model No.GA4600 Angle Grinder

Item No.	Parts No.	Description	Interchangeability	Q'ty	New/ Old	Note1	Note2
001	137018-9	Gear housing assembly		1			
001		INC. 2-6					
002	417771-6	Pin cap		1			
003	233376-2	Compression spring 8		1			
004	213960-9	O-ring 5		1			
005	256546-6	Shoulder pin 4		1			
006	263002-9	Rubber pin 4		1			
007	266361-0	Binding head tapping screw 4X30		4			
008	252186-8	Hex. nut M6		1			
009	226861-2	Spiral bevel gear 10		1			
010	211092-6	Ball bearing 629DDW		1			
011	213445-5	O-ring 26		1			
012	317821-6	Gear housing cover		1			
013	511B03-6	Armature assembly 220-240V		1			
013		INC. 14-20					
014	681636-0	Insulation washer		1			
015	253186-1	Flat washer 7		1			
016	210017-7	Ball bearing 607DDW		1			
017	422768-2	Labyrinth rubber ring 19		1			
018	267756-0	Wave washer 6		1			
019	688117-5	Magnet sleeve		1			
020	259039-2	Self lock 6		1			
021	266345-8	Binding head tapping screw 4X80		2			
022	457137-8	Baffle plate		1			
023	621C84-9	Field		1	*		
023-1	621C89-9	Field	<	1			
024	413R11-8	Motor housing		1			
025	413R14-2	Switch knob		1			
026	413R12-6	Switch lever		1			
027	233121-5	Compression spring 4		1			
028	8141N0-6	Name plate GA4600		1			
029	266007-8	Binding head tapping screw 3X10		2			
030	194074-2	Carbon brush set CB-325		1	*		
030-1	194074-2	Carbon brush set CB-325	O	1			
031	644014-5	Brush holder		1			
032	644014-5	Brush holder		1			
033	8141N2-2	Serial No. label GA4600		1			
034	266007-8	Binding head tapping screw 3X10		2			
035	654544-8	Terminal block 1P		1	*		
036	654544-8	Terminal block 1P		1			
037	650046-2	Switch 1247.0304		1	*		
037-1	650046-2	Switch 1247.0304	O	1	*		
037-2	650086-0	Switch 1247.0305	<	1			
038	620M12-1	Controller		1			
039	266385-6	Binding head tapping screw 4X1		1			

		4					
040	687682-1	Strain relief		1			
041	682566-8	Cord guard 10		1			
042	665865-3	Power supply cord 1.0-2-2.5		1			
043	413R13-4	Rear cover		1			
044	266326-2	Binding head tapping screw 4X18		1			
045	210033-9	Ball bearing 696ZZ		1			
046	233950-6	Ring spring 11		1			
047	226862-0	Spiral bevel gear 37		1			
048	962151-6	Retaining ring (INT) R-32		1			
049	211129-9	Ball bearing 6201DDW		1			
050	267238-2	Flat washer 12		1			
051	213622-9	O-ring 45		1			
052	318331-6	Bearing box		1			
053	265099-4	Pan head screw M4X14		4			
054	345464-4	Labyrinth ring		1			
055	324954-0	Spindle		1			
056	141P27-8	Wheel cover 115AK complete		1			
C10	213009-5	O-ring 4		1	*		
C20	265180-1	Pan head screw M5X16		1			
C30	8050A1-8	Caution label		1			
057	224490-5	Inner flange 14-45		1			
058	224485-8	Lock nut 14-45		1			
059	898444-4	Operation label		1			
060	807G78-4	Clear label		1	*		
A01	199709-0	Cutting wheel cover attachment 115 set		1			
A02	153489-2	Grip 36 complete		1			
A03	D-18459	GRINDING WHEEL 115X6 A24R		1			
A04	782423-1	Lock nut wrench 35		1			
F06	195354-9	Toolless lock nut set		1			
F07	196845-3	Dust collect cover K set (125MM)		1			
F11	1919G1-3	CHAMFERING D.C.A. SET		1			