Model No.DWT310 Cordless Shear Wrench

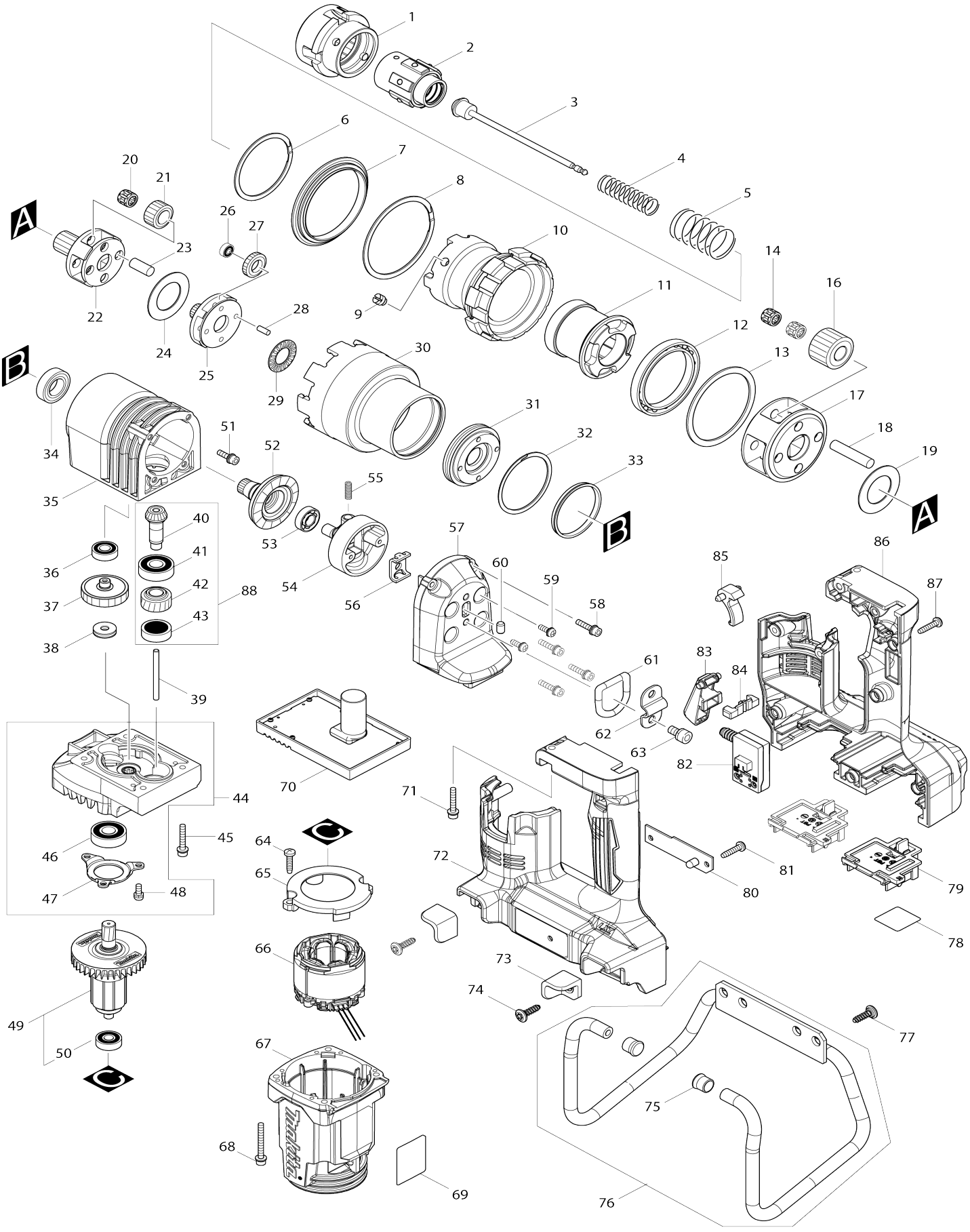

Model No.DWT310 Cordless Shear Wrench

Item No.	Parts No.	Description	Interchangeability	Q'ty	New/ Old	Note1	Note2
001	153909-6	Outer sleeve 22-39 complete		1			
002	764423-3	Inner sleeve 22-39 complete		1			
003	165074-9	Chip rod		1			
004	233087-9	Compression spring 13		1	*		
004-1	232981-2	Compression spring 13	<	1			
005	234143-8	Compression spring 25		1	*		
005-1	232982-0	Compression spring 25	<	1			
006	257941-3	Spiro lock washer 62		1			
007	324447-7	Spacer		1			
008	257940-5	Spiro lock washer 70		1			
009	266022-2	Slotted set screw (dog point) M8 X8		2			
010	325688-8	Outer support		1			
011	153872-3	Inner support complete		1			
012	211611-8	Ball bearing 6810		1			
013	267282-9	Flat washer 60		1			
014	212954-1	Needle cage 810		8			
016	227117-6	Spur gear 20		4			
017	310147-5	Carrier		1			
018	256228-0	Pin 8		4			
019	216207-0	Washer 2542		1			
020	212954-1	Needle cage 810		4			
021	226270-5	Spur gear 25		4			
022	226275-5	Spur gear 11		1			
023	256227-2	Pin 8		4			
024	216207-0	Washer 2542		1			
025	226273-9	Spur gear 14		1			
026	211044-7	Ball bearing 694		4			
027	226269-0	Spur gear 25		4			
028	256226-4	Pin 4		4			
029	216403-0	Thrust needle cage 1528		1			
030	227118-4	Internal gear 53-66		1			
031	323855-9	Bracket		1			
032	257929-3	Spiro lock washer 52		1			
033	257186-3	Ring 44		1			
034	211221-1	Ball bearing 6902		1			
035	159930-3	Gear case complete		1			
C10	263002-9	Rubber pin 4		2			
036	210013-5	Ball bearing 698VV		1			
037	226651-3	Helical gear 30		1			
038	212048-2	Thrust needle bearing 617		1			
039	256225-6	Pin 4		1			
040	226711-1	Spiral bevel gear 12		1			
041	211097-6	Ball bearing 6000LLB		1			
042	226476-5	Helical gear 18		1			
043	211031-6	Ball bearing 608LLB		1			
044	134788-1	Gear housing assembly		1			
044		INC. 46-48					

045	922148-7	Hex. socket head bolt M4X25 WR		4			
046	211097-6	Ball bearing 6000LLB		1			
047	344470-6	Bearing retainer		1			
048	911111-5	Pan head screw M4X10 W		3			
049	519497-7	Rotor assembly		1			
049		INC. 50					
050	211023-5	Ball bearing 607LB		1			
051	922123-3	Hex. socket head bolt M4X14 WR		4			
052	226812-5	Gear 14-41		1			
053	211082-9	Ball bearing 699		1			
054	311930-3	Rod support		1			
055	233098-4	Compression spring 4		1			
056	344062-1	Stopper plate		1			
057	319669-2	Rear cover		1	*		
057-1	319834-3	Rear cover	O	1	*		
057-2	312B27-3	Rear cover	<	1			
058	922133-0	Hex. socket head bolt M4X18 WR		4			
059	911118-1	Pan head screw M4X12 WR		2			
060	263005-3	Rubber pin 6		1			
061	282018-5	D-ring		1			
062	345517-9	Plate		1			
063	266157-9	Hex. socket head bolt M6X12		2			
064	265995-6	Binding head tapping screw 4X18		2			
065	458306-4	Baffle plate		1			
066	629337-2	Stator		1	*		
066-1	629C12-8	Stator	S	1			
067	458302-2	Motor housing		1	*		
067-1	4139E8-8	MOTOR HOUSING	<	1			
068	922909-5	Hex. socket head bolt M4X35 WG		4			
069	854C60-0	Name plate DWT310		1			
070	632L40-8	Controller unit		1	*		
070-1	632N37-9	Controller unit	<	1			
071	922149-5	Hex. socket head bolt M4X25 WG		2			
072	183J09-8	Handle set		1	*		
C10	263005-3	Rubber pin 6		4	*		
C20	816P35-5	Indication label		1	*		
C30	422226-8	Sponge sheet		1	*		
C40	416285-2	Acrylic pin 5		1	*		
072		INC. 86			*		
072-1	183K85-8	Handle set	<	1			
C10	263005-3	Rubber pin 6		4			
C20	816P35-5	Indication label		1			
C30	422226-8	Sponge sheet		1			
C40	416285-2	Acrylic pin 5		1			
072-1		INC. 86					
073	327048-0	Protection block		2	*		
073-1	347482-8	Protection block	O	2			
074	251587-7	Hexalobular socket tapping screw 5X18		2			
075	422230-7	Cap		2			
076	135919-5	Guard pipe assembly		1	*		

076		INC. 75			*		
076-1	135992-5	Guard assembly	<	1			
076-1		INC. 75					
077	251587-7	Hexalobular socket tapping screw 5X18		4			
078	854C68-4	Serial No. label DWT310		1			
079	644809-6	Terminal		2			
080	620809-0	LED circuit		1			
081	265995-6	Binding head tapping screw 4X18		2			
082	651083-9	Switch C3XA-1PSPM		1			
083	458303-0	Switch lever		1			
084	458307-2	Trigger lock		1	*		
084-1	459707-9	Trigger lock	O	1			
085	311928-0	Chip lever		1			
086	183J09-8	Handle set		1	*		
C10	263005-3	Rubber pin 6		4	*		
C20	816P35-5	Indication label		1	*		
C30	422226-8	Sponge sheet		1	*		
C40	416285-2	Acrylic pin 5		1	*		
086		INC. 72			*		
086-1	183K85-8	Handle set	<	1			
C10	263005-3	Rubber pin 6		4			
C20	816P35-5	Indication label		1			
C30	422226-8	Sponge sheet		1			
C40	416285-2	Acrylic pin 5		1			
086-1		INC. 72					
087	265995-6	Binding head tapping screw 4X18		7			
088	134790-4	Gear assembly		1			
088		INC. 40-43					
089	620K96-7	Controller B	S	1			
090	638A32-9	Lead unit	S	1			
091	652119-7	Pan head screw M2X6	S	6			
A01	764361-9	Outer sleeve 20-37		1			
A02	764422-5	Inner sleeve 20-38 complete		1			
A03	783001-0	Slotted screwdriver 6		1			
A04	821748-9	Plastic case		1			
C10	162271-8	Latch		2			
A08	161347-8	Shoulder belt		1			
F01	196276-6	Outer sleeve 20-37 set		1			
F28	193805-6	Outer sleeve 20-37 set		1			
F29	193960-4	Outer sleeve 22-39 set		1			