Model No.DVC350 CORDLESS VACUUM CLEANER

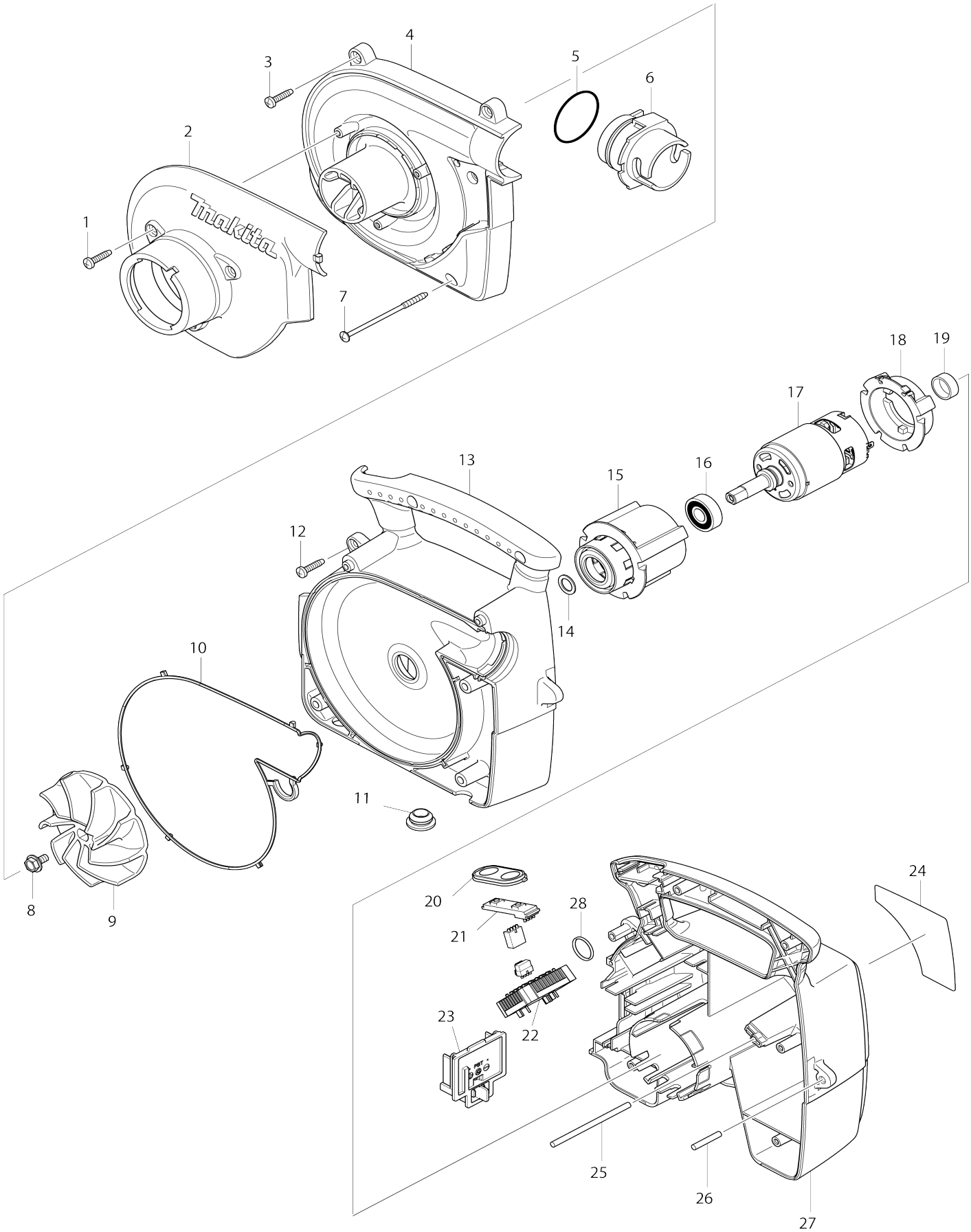

Model No.DVC350 CORDLESS VACUUM CLEANER

Item No.	Parts No.	Description	Interchangeability	Q'ty	New/ Old	Note1	Note2
001	265995-6	Binding head tapping screw 4X18		3			
002	140642-9	Front cover complete		1	*		
002-1	140455-8	Front cover complete	O	1			
003	265995-6	Binding head tapping screw 4X18		2			
004	451989-9	Fan cover		1			
005	213508-7	O-ring 38		1			
006	452067-8	Joint		1			
007	266049-2	Binding head tapping screw 4X75		3			
008	266614-7	Hex. head flange bolt M5X10		1			
009	240122-6	Fan 86		1			
010	424332-5	Seal ring		1			
011	286238-3	Cap 19		4	*		
011-1	286046-2	Cap 19	O	4			
012	265995-6	Binding head tapping screw 4X18		3			
013	187008-2	Motor housing set		1			
013		INC. 10,27					
014	267047-9	Flat washer 10		1			
015	424330-9	Motor rubber ring A		1			
016	210059-1	Ball bearing 6000DDW		1			
017	629888-5	DC motor		1			
018	424331-7	Motor rubber ring B		1			
019	421940-3	Cap		1			
020	140463-9	Switch plate complete		1			
021	631973-2	Switch unit		1			
022	638851-7	Controller unit		1			
023	643852-2	Terminal		1			
024	815X14-8	Name plate DVC350		1			
025	268092-7	Pin 4		1			
026	256206-0	Pin 4		1			
027	187008-2	Motor housing set		1			
027		INC. 10,13					
028	259048-1	Ring		1			
A01	122918-6	Dust bag assembly 3L		1	*		
A01-1	122G96-4	Dust bag assembly	O	1			
A02	140456-6	Hose complete 28-2.5		1			
A03	166094-6	Shoulder belt		1			
A04	132025-7	Nozzle assembly		1			
C10	414145-2	Joint		1			
A05	417766-9	Front cuff 38		1			
F03	198533-8	Nozzle assembly set		1			
F96	422A02-6	Cap		1			

Please state Parts No. when your order.

Print Date 29/09/2025