Model No.DVC157L CORDLESS VACUUM CLEANER

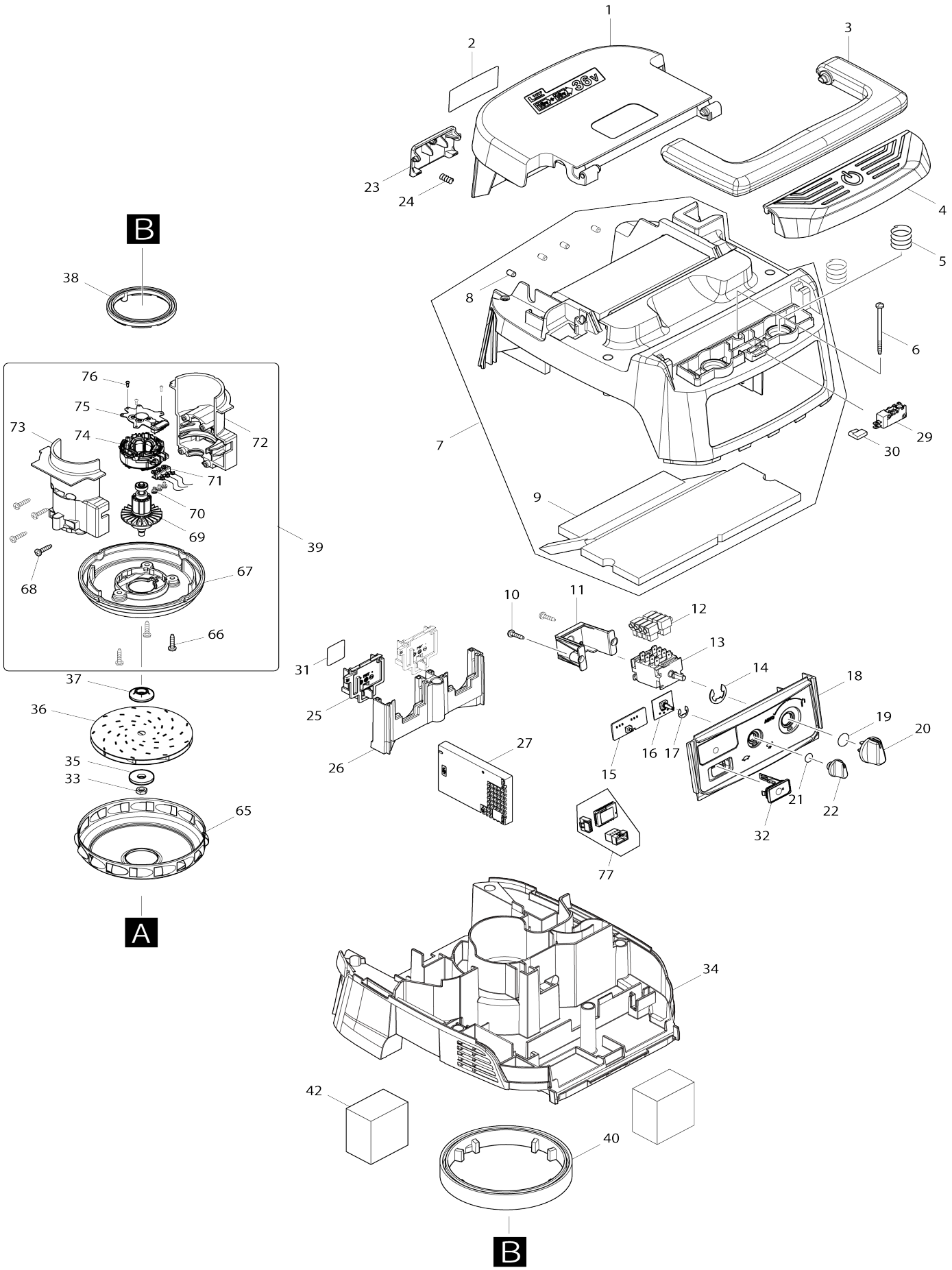

Model No.DVC157L CORDLESS VACUUM CLEANER

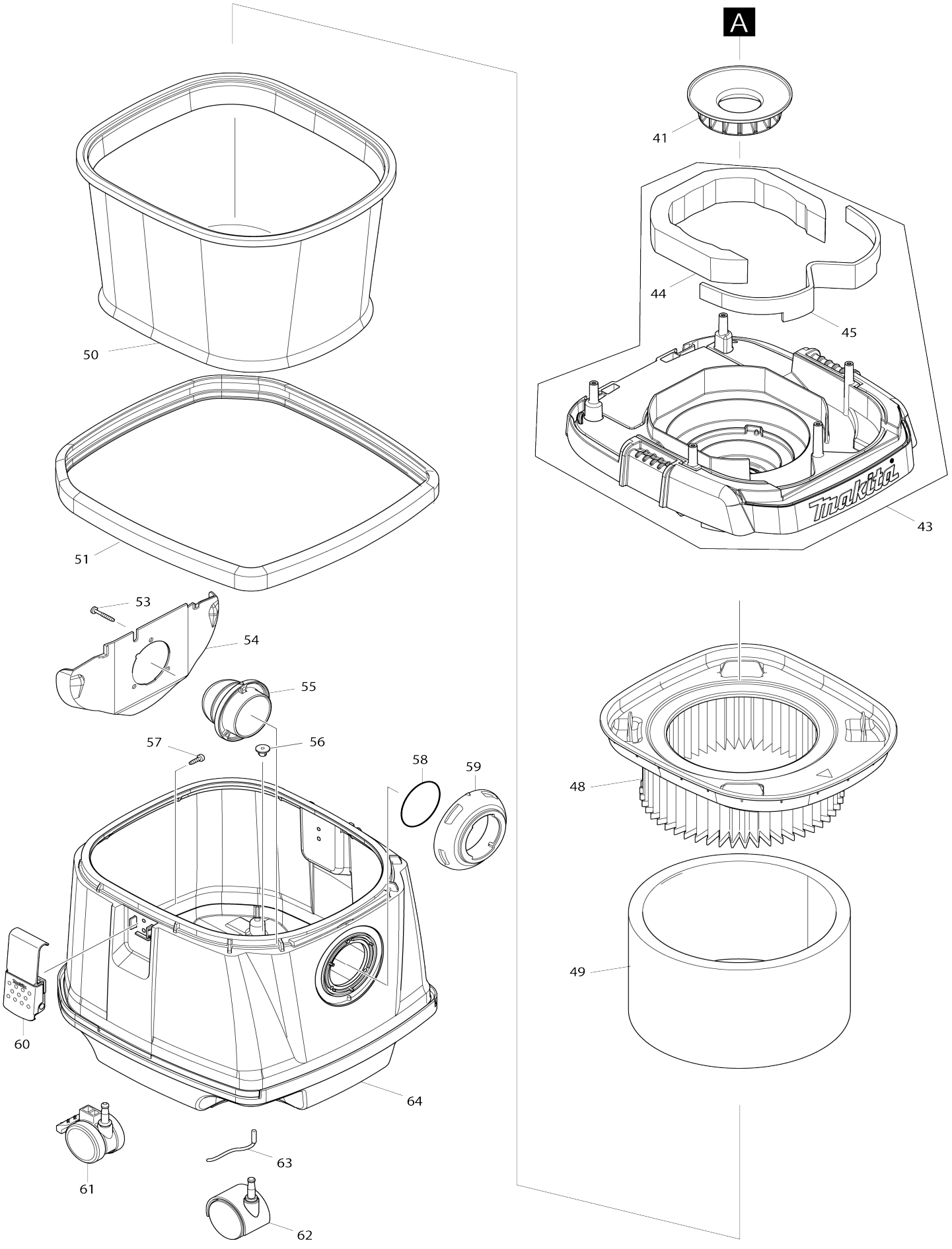

Model No.DVC157L CORDLESS VACUUM CLEANER

Item No.	Parts No.	Description	Interchangeability	Q'ty	New/ Old	Note1	Note2
001	144486-9	Battery cover complete		1			
C10	891977-8	Caution label		1			
002	857C08-1	Name plate DVC157L		1			
003	455734-4	Grip		1			
004	459262-1	Switch button		1			
005	234273-5	Compression spring 20		2			
006	266340-8	Binding head tapping screw 4X65		6			
007	144973-8	Cowling complete		1			
007		INC. 8,9					
008	263005-3	Rubber pin 6		4			
009	424688-6	Top damper		1			
010	266326-2	Binding head tapping screw 4X18		2			
011	451343-7	Switch holder		1			
012	686023-8	Receptacle sleeve		8			
013	651098-6	Switch 1703. 4801		1			
014	961062-2	Stop ring (EXT) E-12		1			
015	620D40-2	LED circuit		1			
016	620D39-7	Sub controller		1			
017	961013-5	Stop ring (EXT) E-7		1			
018	140T97-8	Switch base complete		1			
C10	812D41-6	Indication label		1			
019	213176-6	O-ring 14		1			
020	455733-6	Switch lever		1			
021	213054-0	O-ring 9		1			
022	451344-5	Switch dial		1			
023	455728-9	Battery cover hook		1			
024	231240-1	Compression spring 7		1			
025	644808-8	Terminal		2			
026	455729-7	Terminal base		1			
027	620D20-8	Controller		1			
029	651910-0	Switch D2VW-01-3HS		1			
030	686039-3	Receptacle sleeve		1			
031	857C16-2	Serial No. label DVC157L		1			
032	140G18-2	Cap complete		1			
C10	213218-6	O-ring 16		1	*		
C11	213A05-9	O-ring 16	O	1			
C20	818F57-1	Cap label		1			
033	252268-6	Hex. nut M6		1			
034	412581-6	Separator		1			
035	253752-4	Flat washer 8		1			
036	240178-9	Fan 104		1			
037	313062-2	Flange		1			
038	424685-2	Rubber ring 60		1			
039	127653-1	Motor assembly		1			
039		INC. 66-76					
040	424686-0	Rubber ring 120		1			

041	422590-7	Support ring		1			
042	424690-9	Rear block filter		2			
043	143175-3	Tank cover complete		1			
043		INC. 44,45					
044	424691-7	Band damper		1			
045	424689-4	Front damper		1			
048	197166-6	Powder filter H set		1			
049	423398-2	Damper		1			
050	140253-0	Pre-filter complete		1			
051	422148-2	Bumper		1			
053	266257-5	Binding head tapping screw 4X28		3			
054	419351-4	Holder plate		1			
055	419350-6	Holder		1			
056	421468-1	Cord seal		1			
057	266192-7	Binding head tapping screw 4X14		4	*		
057-1	266385-6	Binding head tapping screw 4X14	O	4			
058	213655-4	O-ring 56		1			
059	451348-7	Inlet		1			
060	168537-4	Hook		2			
061	168535-8	Caster 50		2	*		
061-1	162C28-5	CASTER 50	O	2			
062	168434-4	Caster 50		2	*		
062-1	162C27-7	Caster 50	O	2			
063	649150-2	Earth line 120		1			
064	459493-2	Tank		1			
065	347171-5	Fan cover		1			
066	266326-2	Binding head tapping screw 4X18		3			
067	457486-3	Fan base		1			
068	266326-2	Binding head tapping screw 4X18		4			
069	619431-8	Rotor		1			
070	652069-6	Flat head screw M3X6		3			
071	632J83-8	Lead unit		1			
072	183F90-5	Motor housing set		1			
072		INC. 73					
073	183F90-5	Motor housing set		1			
073		INC. 72					
074	629491-2	Stator		1			
075	620D38-9	Controller B		1			
076	266490-9	Pan head tapping screw 2X6		3			
077	620D41-0	Sub controller		1			
A01	195433-3	Hose complete 28-3.5 set		1			
C10	417191-4	Cuff lock		1			
C20	417586-1	Stopper		1			
C30	417662-1	Sleeve		1			
C40	417766-9	Front cuff 38		1			
A01		INC. A03,A04					
A02	195432-5	Poly bag set		1			
A03	417765-1	Front cuff 22		1			

A04	424379-9	Front cuff 24		1			
A06	195434-1	Hose complete 38-2.5 set		1			
C10	417191-4	Cuff lock		1			
C20	417306-3	Sleeve		2			
C30	417307-1	Front cuff		1			
C40	417586-1	Stopper		2			
A07	199455-5	Nozzle assembly set		1			
A08	192563-1	Straight pipe set		1			
A09	192562-3	Bent pipe		1			
A10	410306-2	Corner nozzle		1			
A11	451350-0	Stopper		1			
A13	198900-7	Wireless unit set		1	*		
A13-1	198900-7	Wireless unit set	<	1	*		
A13-2	198900-7	Wireless unit set	<	1	*		
A13-3	198900-7	Wireless unit set	O	1	*		
A13-4	198900-7	Wireless unit set	<	1			
A14	911138-5	Pan head screw M4X20 WR		1			
A15	127607-8	Tool box assembly		1			
E01	891978-6	Caution label		1			
F18	144408-9	Hose complete 28-1.5		1			
F22	191E30-3	Flexible hose with lock set		1			
F26	191G87-6	Nozzle assembly set		1			
F27	191G89-2	Telescopic pipe set		1			
F30	192236-6	Anchor nozzle set		1			
F37	195432-5	Poly bag set		1			
F40	195435-9	Hose complete 38-5 set		1			
F41	195436-7	Hose complete 28-5 set		1			
F42	195437-5	Hose complete 28-2.5 set		1			
F44	195544-4	Holder 10-33 set		1			
F45	195545-2	Front cuff 38 set		1			
F46	195546-0	Front cuff 24 set		1			
F47	195547-8	Front cuff 22 set		1			
F48	195548-6	Joint 22-38 set		1			
F49	195549-4	Nozzle assembly A set		1			
F51	195551-7	Nozzle assembly set		1			
F52	195552-5	Damper set		1			
F53	195553-3	Pre-filter set		1			
F55	195557-5	Filter bag set		1	*		
F55-1	195557-5	Filter bag set	O	1			
F56	195637-7	Holder cuff set		1			
F57	197166-6	Powder filter H set		1			
F59	197323-6	Hose stand set		1			
F62	198184-7	Nozzle assembly set		1			
F66	198529-9	Nozzle assembly set		1			
F68	198533-8	Nozzle assembly set		1			
F69	198540-1	Shelf brush set		1			
F70	198555-8	Round brush set		1			
F72	198560-5	Telescopic pipe assembly set		1			
F74	198873-4	Shelf brush set		1			
F75	198878-4	Round brush set		1			
F76	198919-6	Long corner nozzle set		1			
F77	198992-6	Long corner nozzle set		1			

F78	199038-1	Seat nozzle set		1			
F79	199039-9	Seat nozzle set		1			
F81	199439-3	Crevice nozzle 415 set		1			
F86	191M77-5	Joint A32 set		1			
F87	191M78-3	Joint B35 set		1			
F88	191M79-1	Joint C38 set		1			
G05	1912F9-8	Nozzle assembly set		1			
G06	1914Y6-9	Rotary brush nozzle set		1			
G07	1914Y7-7	Rotary brush nozzle set		1			
G08	1915W7-9	BRUSH COMPLETE SET		1			
G09	1912G4-5	Telescopic pipe complete set		1			
G10	1912G5-3	Bent pipe complete set		1			
G11	413R35-4	Stopper		1			

Please state Parts No. when your order.

Print Date 12/01/2025