Model No.DUR368L Cordless Grass Trimmer

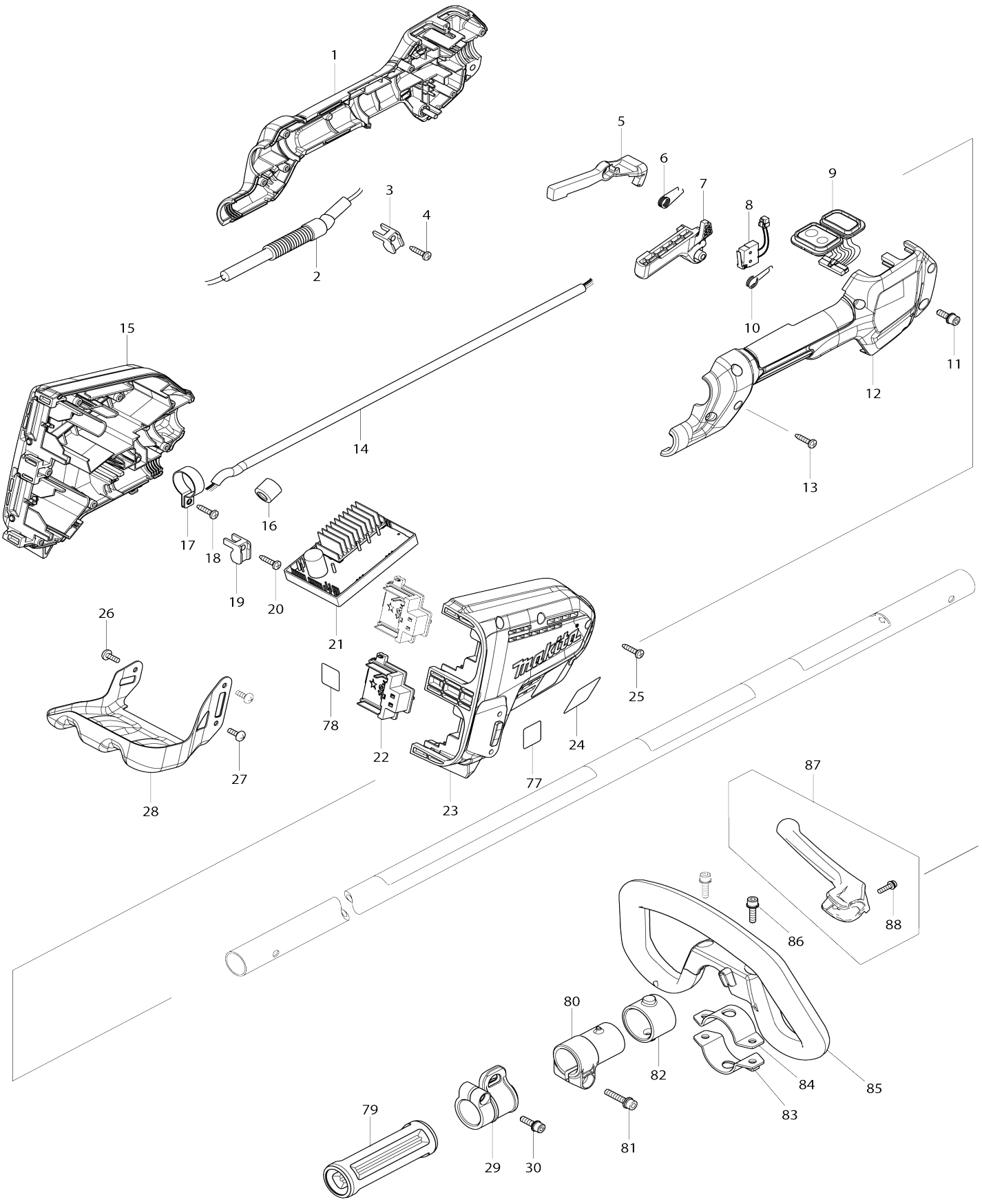

Model No.DUR368L Cordless Grass Trimmer

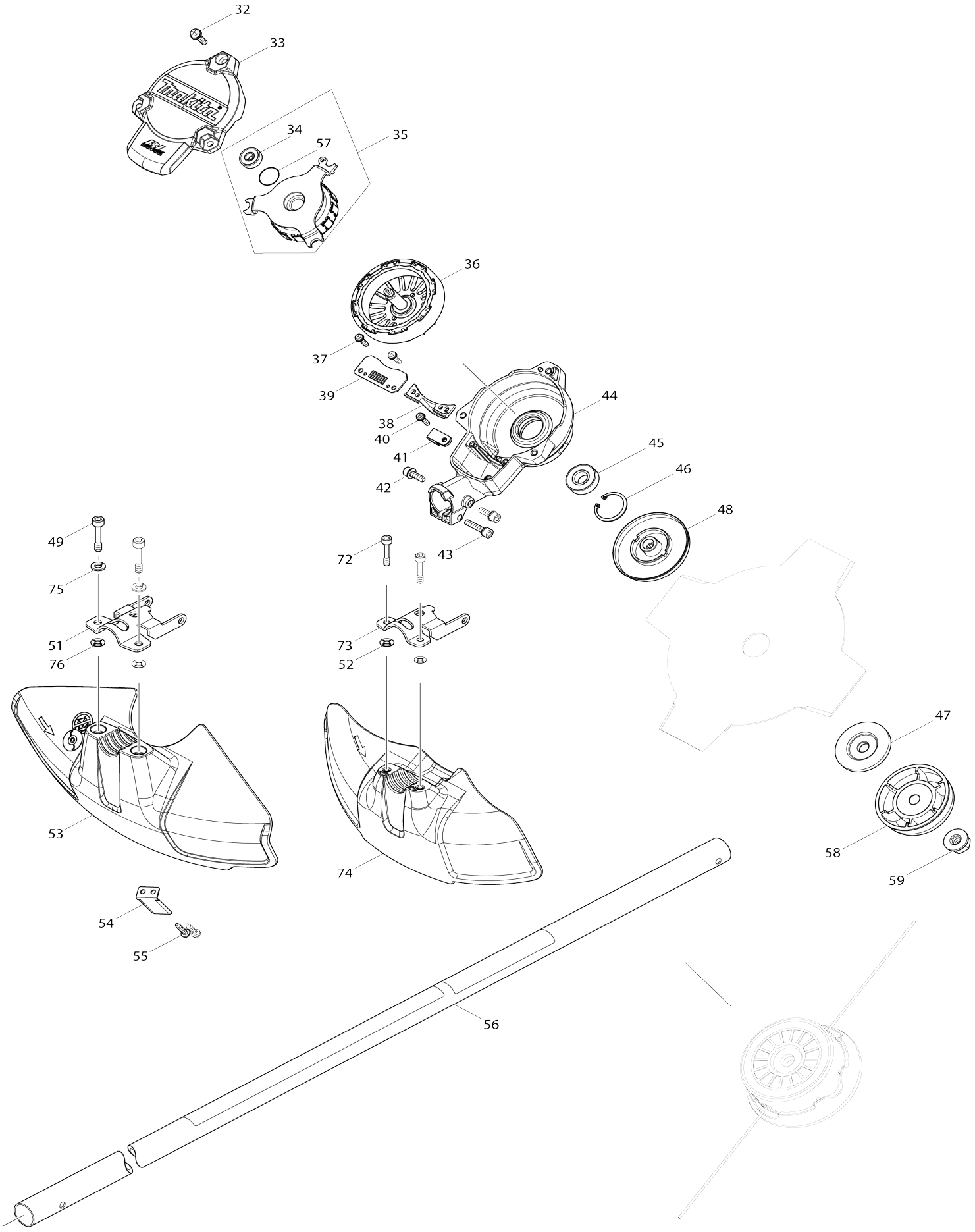

Model No.DUR368L Cordless Grass Trimmer

Item No.	Parts No.	Description	Interchangeability	Q'ty	New/ Old	Note1	Note2
001	183A19-1	Grip set		1	*		
001		INC. 12			*		
001-1	1830T1-4	Grip set	S	1			
001-1		INC. 12					
002	699119-6	Power supply cord unit		1	*		
002-1	699248-5	Power supply cord unit	S	1			
003	687260-7	Strain relief		1			
004	266326-2	Binding head tapping screw 4X18		1			
005	455629-1	Lock off lever		1	*		
005-1	413Y35-6	Lock off lever	O	1	*		
005-2	141X89-4	Lock off lever complete	S	1			
006	233621-5	Torsion spring 9		1	*		
006-1	233101-1	Compression spring 4	S	1			
007	455625-9	Switch lever		1	*		
007-1	413P50-6	Switch lever	S	1			
008	632E26-0	Switch unit		1			
009	140L81-5	Sub controller complete G		1			
C10	819N38-6	Switch label		1			
C20	819N39-4	Indication label		1			
010	233612-6	Torsion spring 10		1	*		
010-1	233622-3	Torsion spring 12	S	1			
011	922228-9	Hex. socket head bolt M5X18 WR		1			
012	183A19-1	Grip set		1	*		
012		INC. 1			*		
012-1	1830T1-4	Grip set	S	1			
012-1		INC. 1					
013	266326-2	Binding head tapping screw 4X18		6			
014	699067-9	Power supply cord unit		1			
015	183L33-3	Housing set		1	*		
C10	263005-3	Rubber pin 6		4	*		
C20	252126-6	Hex. lock nut M4-7		3	*		
015		INC. 23			*		
015-1	183L33-3	Housing set	O	1			
C10	263005-3	Rubber pin 6		4			
C20	252126-6	Hex. lock nut M4-7		3			
015-1		INC. 23					
016	688163-8	Line filter		1			
017	346248-3	Clamp 24		1			
018	266326-2	Binding head tapping screw 4X18		1			
019	687260-7	Strain relief		1			
020	266326-2	Binding head tapping screw 4X18		1			
021	620A36-5	Controller		1	*		
021-1	620G00-2	Controller	<	1	*		
021-2	620J84-8	Controller	S	1	*		
021-2	620J84-8	Controller		1	*		

D							
021-3	620N96-5	Controller	<	1			
022	644808-8	Terminal		2			
023	183L33-3	Housing set		1	*		
C10	263005-3	Rubber pin 6		4	*		
C20	252126-6	Hex. lock nut M4-7		3	*		
023		INC. 15			*		
023-1	183L33-3	Housing set	O	1			
C10	263005-3	Rubber pin 6		4			
C20	252126-6	Hex. lock nut M4-7		3			
023-1		INC. 15					
024	855V75-4	Name plate DUR368L		1			
025	266326-2	Binding head tapping screw 4X18		7			
026	251314-2	Truss head screw M4X12		1			
027	251314-2	Truss head screw M4X12		2			
028	346858-6	Battery guard		1			
029	168478-4	Hanger		1			
030	922228-9	Hex. socket head bolt M5X18 WR		1			
032	911233-1	Pan head screw M5X20 WR		3			
033	455626-7	Top cover		1			
034	210062-2	Ball bearing 607ZZ		1	*		
034-1	210269-0	Ball bearing 607ZZ	O	1			
034-1D	210269-0	Ball bearing 607ZZ		1			
035	529146-8	Stator assembly		1	*		
035		INC. 34,57			*		
035-1	520136-4	Stator assembly	<	1	*		
035-1		INC. 34,57			*		
035-2	520135-6	Stator assembly	O	1	*		
035-2		INC. 34,57			*		
035-3	592E25-3	Stator assembly	S	1	*		
035-3		INC. 34,57			*		
035-3D	592E25-3	Stator assembly		1	*		
035-3D		INC. 34,57			*		
035-4	592E25-3	Stator assembly	O	1			
035-4		INC. 34,57					
036	619462-7	Rotor		1			
037	911128-8	Pan head screw M4X16 WR		2			
038	455628-3	Inner cover		1			
039	620562-8	Controller B		1	*		
039-1	620E48-2	Controller B	O	1	*		
039-2	620J62-8	Controller B	S	1			
039-2D	620J62-8	Controller B		1			
040	911128-8	Pan head screw M4X16 WR		1			
041	687042-7	Strain relief		1			
042	922223-9	Hex. socket head bolt M5X16 WR		2			
043	922241-7	Hex. socket head bolt M5X25 W		1			
044	143039-1	Motor housing complete		1			
045	211131-2	Ball bearing 6001DDW		1			

046	962106-1	Retaining ring (INT) R-28		1			
047	346084-7	Clamp washer		1			
048	140L84-9	Receive washer complete G		1			
049	266579-3	Hex. socket head bolt M6X30		2			
051	346073-2	Protector clamp		1			
052	261156-6	Polypropylene washer 4		2			
053	455926-5	Protector		1			
054	346855-2	Cutter		1			
055	266326-2	Binding head tapping screw 4X18		2			
056	140L89-9	Pipe complete O		1	*		
C10	819312-8	Makita logo label		1	*		
C20	819N87-3	Caution label		1	*		
056-1	1414L3-4	PIPE COMPLETE O	<	1			
C10	819312-8	Makita logo label		1			
C20	8104M1-3	CAUTION LABEL		1			
057	213325-5	O-ring 19		1			
058	168526-9	Cup		1			
059	264025-0	Hex. nut M10-17		1			
072	266896-1	Hex. socket head bolt M5X20		2			
073	346785-7	Protector clamp		1			
074	455815-4	Protector		1	*		
074-1	413886-7	Protector	O	1			
074-1D	413886-7	Protector		1			
075	253428-3	Spring washer 6		2			
076	413143-3	Washer		2			
077	807E85-5	Sound 92dB label		1	*		
077-1	800A66-4	Sound 91dB label	<	1			
077-1D	800A66-4	Sound 91dB label		1			
078	855V83-5	Serial No. label DUR368L		1			
079	451601-1	Spacer 24		1			
080	457269-1	Pipe holder 24		1			
081	922244-1	Hex. socket head bolt M5X25 WG		1			
082	424942-8	Damper		1			
083	347114-7	Lower clamp 35		1			
084	347113-9	Upper clamp 35		1			
085	457267-5	Loop handle		1			
086	922234-4	Hex. socket head bolt M5X20 WG		2			
087	144315-6	Barrier complete		1			
087		INC. 88					
088	911128-8	Pan head screw M4X16 WR		1			
A01	125516-5	Band assembly		1			
A02	198893-8	Cutter assembly 95-M10L set ME		1	*		
A02D	191D89-4	Trimmer head 96-M10L set		1	*		
A02D		COMPO-PARTS			*		
A02-1	1915D8-4	Trimmer head assembly 98-M10L	O	1			
A04	195150-5	Cutter blade set		1	*		
A04-1	1916D2-2	Cutter blade 230-4 set	O	1			
A05	456924-2	Tool cover		1			
A06	783202-0	Hex. wrench 4		1			

A07	831304-7	Accessory bag		1			
A08	783217-7	Hex. wrench 5		1			
A09	783013-3	Box driver 16-17		1	*		
A09-1	782238-6	Box wrench 17	O	1			
A10	126642-3	Plastic blade assembly 255-M10L		1			
A11B	***DC18RD	DC18RD TWO PORT FAST CHARG ER		1			
A11B		COMPO-PARTS					
A12B	197280-8	Battery BL1850B set		2			
A15B	450128-8	Battery cover		2			
B01	197294-7	Protector set		1			
B01		INC. 47,48,52,58,59,72-74					
B01D	197294-7	Protector set		1			
B01D		INC. 47,48,52,58,59,72-74					
F06	197471-1	Nylon cord 2.0-15M set		1			
F07	197472-9	Nylon cord 2.0-15M set		1			
F08	197473-7	Nylon cord 2.0-30M set		1			
F09	197474-5	Nylon cord 2.0-160M set		1			
F10	197475-3	Nylon cord 2.0-280M set		1			
F12	198383-1	Plastic blade 255 set ME		1			
F13	198426-9	Plastic blade 255 blade set ME		1			
F14	198501-1	Nylon cord 2.4-15M set		1	*		
F15	198502-9	Nylon cord 2.4-30M set		1			
F16	198503-7	Nylon cord 2.4-120M set		1			
F17	198504-5	Nylon cord 2.4-180M set		1			
F25	1917V9-0	NYLON CORD 2.0-15M SET		1			
F26	1917W0-5	NYLON CORD 2.0-30M SET		1			
F27	1917W1-3	NYLON CORD 2.0-310M SET		1			
F28	1917W2-1	NYLON CORD 2.4-15M SET		1			
F29	1917W3-9	NYLON CORD 2.4-30M SET		1			
F30	1917W4-7	NYLON CORD 2.4-225M SET		1			
F47	1915D8-4	Trimmer head assembly 98-M10 L		1			
F48	1914R8-6	Trimmer head assembly 98-M10 L		1			

Please state Parts No. when your order.

Print Date 08/31/2026