Model No.DUR189 Cordless Grass Trimmer

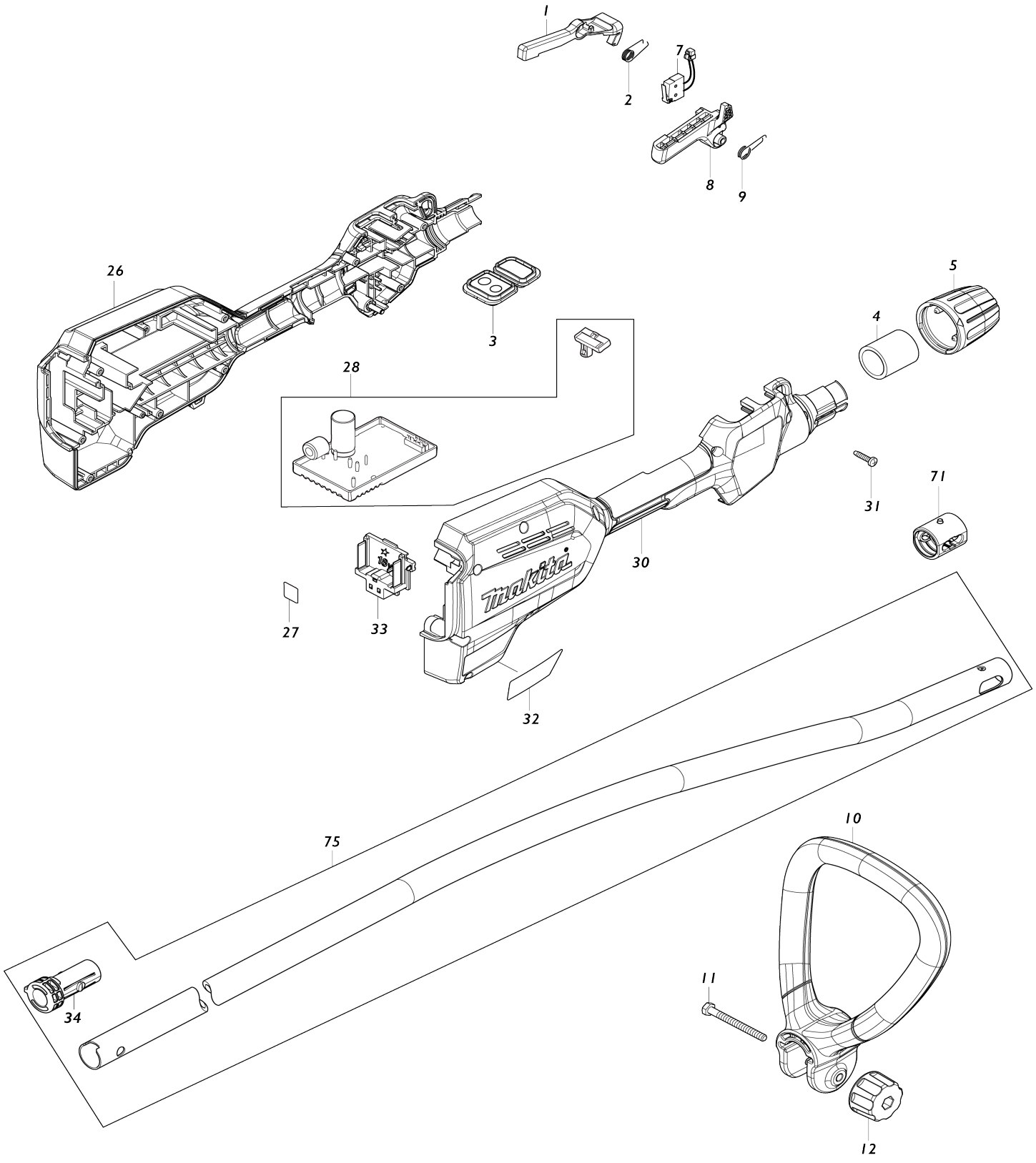

Model No.DUR189 Cordless Grass Trimmer

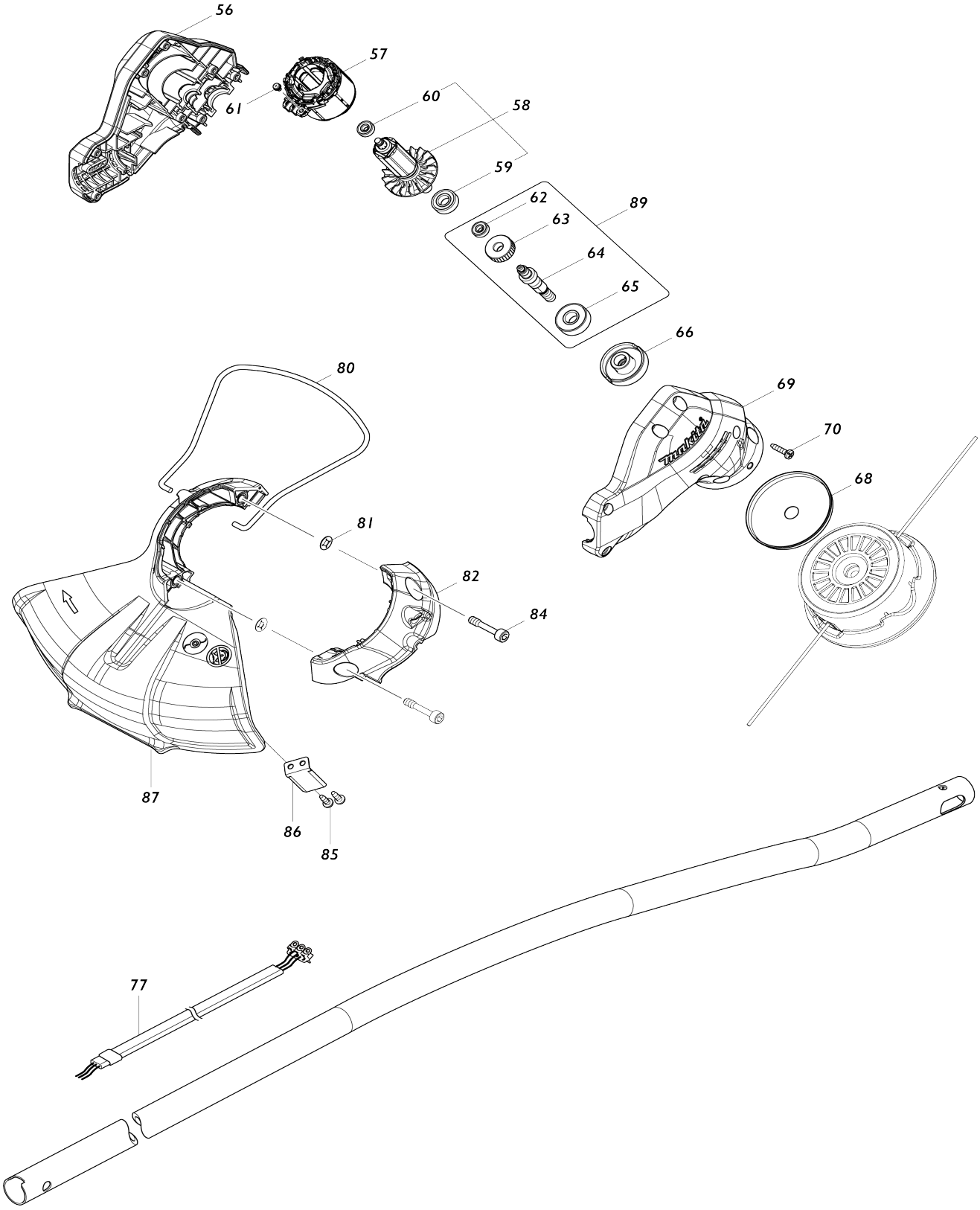

Model No.DUR189 Cordless Grass Trimmer

Item No.	Parts No.	Description	Interchangeability	Q'ty	New/ Old	Note1	Note2
001	456671-5	Lock off lever		1	*		
001-1	141X90-9	Lock off lever complete	S	1			
002	233621-5	Torsion spring 9		1	*		
002-1	233101-1	Compression spring 4	S	1			
003	140B61-1	Sub controller complete		1			
C10	816X50-7	Switch label		1			
C20	816X51-5	Indication label		1			
004	456647-2	Rubber sleeve 24A		1			
005	453344-1	Lock sleeve		1			
007	632E26-0	Switch unit		1			
008	456670-7	Switch lever		1	*		
008-1	4130G4-6	Switch lever	S	1			
009	233612-6	Torsion spring 10		1	*		
009-1	233622-3	Torsion spring 12	S	1			
010	456423-4	Loop handle 24		1			
011	921382-6	Hex. head bolt M6X60		1			
012	264072-1	Thumb nut M6		1			
C10	931302-2	Hex. nut M6		1			
026	183E59-3	Grip housing set		1	*		
C10	263005-3	Rubber pin 6		2	*		
026		INC. 30			*		
026-1	1831A5-9	Grip housing set	S	1			
C10	263005-3	Rubber pin 6		2			
026-1		INC. 30					
027	854K68-2	Serial No. label DUR189		1			
028	620910-1	Controller		1	*		
028-1	620910-1	Controller	O	1	*		
028-2	620F97-5	Controller	<	1	*		
028-3	620N92-3	Controller	S	1			
030	183E59-3	Grip housing set		1	*		
C10	263005-3	Rubber pin 6		2	*		
030		INC. 26			*		
030-1	1831A5-9	Grip housing set	S	1			
C10	263005-3	Rubber pin 6		2			
030-1		INC. 26					
031	266326-2	Binding head tapping screw 4X18		10			
032	854K62-4	Name plate DUR189		1			
033	644808-8	Terminal		1	*		
033-1	644809-6	Terminal	S	1			
034	456648-0	Pipe cap		1			
056	183F18-3	Motor housing set		1			
056		INC. 69					
057	629248-1	Stator		1			
058	519429-4	Rotor assembly		1	*		
058		INC. 59,60			*		
058-1	519429-4	Rotor assembly	O	1			
058-1		INC. 59,60					

059	210049-4	Ball bearing 609ZZ		1			
060	211157-4	Ball bearing 695ZZ		1			
061	652069-6	Flat head screw M3X6		3			
062	211157-4	Ball bearing 695ZZ		1			
063	221492-2	Helical gear 26		1			
064	327132-1	Cutter shaft		1			
065	210059-1	Ball bearing 6000DDW		1			
066	144512-4	Receive washer complete		1			
C10	213055-8	O-ring 10		1			
068	346857-8	Guard		1			
069	183F18-3	Motor housing set		1			
069		INC. 56					
070	266326-2	Binding head tapping screw 4X18		8			
071	424567-8	Rubber sleeve 24		1			
075	135955-1	Pipe assembly		1			
C10	816X52-3	Caution label		1			
075		INC. 34					
077	699114-6	Power supply cord unit		1			
C10	680391-1	Sponge sheet		1			
080	326348-5	Wire guard		1			
081	413143-3	Washer		2			
082	454641-8	Protector holder		1			
084	265647-9	Hex. socket head bolt M6X30 W		2			
085	266427-6	Binding head tapping screw 4X12		2			
086	346855-2	Cutter		1			
087	456651-1	Protector		1			
089	135967-4	Gear assembly		1			
089		INC. 62-65					
A01	198971-4	Nylon cutting head assembly 95-M8R set ME		1			
A02	125516-5	Band assembly		1			
A04	783202-0	Hex. wrench 4		1			
A05	783217-7	Hex. wrench 5		1			
A06	831304-7	Accessory bag		1			
A07B	450128-8	Battery cover		1			
A08B	***DC18RC	DC18RC FAST CHARGER		1			
A08B		COMPO-PARTS					
A09B	197600-6	Battery BL1830B set		1	*		
A09-1B	197600-6	Battery BL1830B set	O	1			
E01	817C33-4	Sound 92dB label		1			
F02	197297-1	Nylon cutting head assembly set		1			
F03	196591-8	Nylon cord 2.0-15M set		1			
F04	197471-1	Nylon cord 2.0-15M set		1			
F05	197472-9	Nylon cord 2.0-15M set		1			
F06	197473-7	Nylon cord 2.0-30M set		1			
F07	197474-5	Nylon cord 2.0-160M set		1			
F08	197475-3	Nylon cord 2.0-280M set		1			
F09	198383-1	Plastic blade 255 set ME		1			
F11	198426-9	Plastic blade 255 blade set ME		1			

F13	198971-4	Nylon cutting head assembly 95-M8R set ME		1			
F14	198972-2	Nylon cutting head assembly 95-M8R set M		1	*		
F15	191D92-5	Trimmer head 96-M8R set		1			
F22	1917V9-0	NYLON CORD 2.0-15M SET		1			
F23	1917W0-5	NYLON CORD 2.0-30M SET		1			
F24	1917W1-3	NYLON CORD 2.0-310M SET		1			
F25	1917W2-1	NYLON CORD 2.4-15M SET		1			
F26	1917W3-9	NYLON CORD 2.4-30M SET		1			
F27	1917W4-7	NYLON CORD 2.4-225M SET		1			

Please state Parts No. when your order.

Print Date 08/31/2026