Model No.DUH507 Cordless Hedge Trimmer

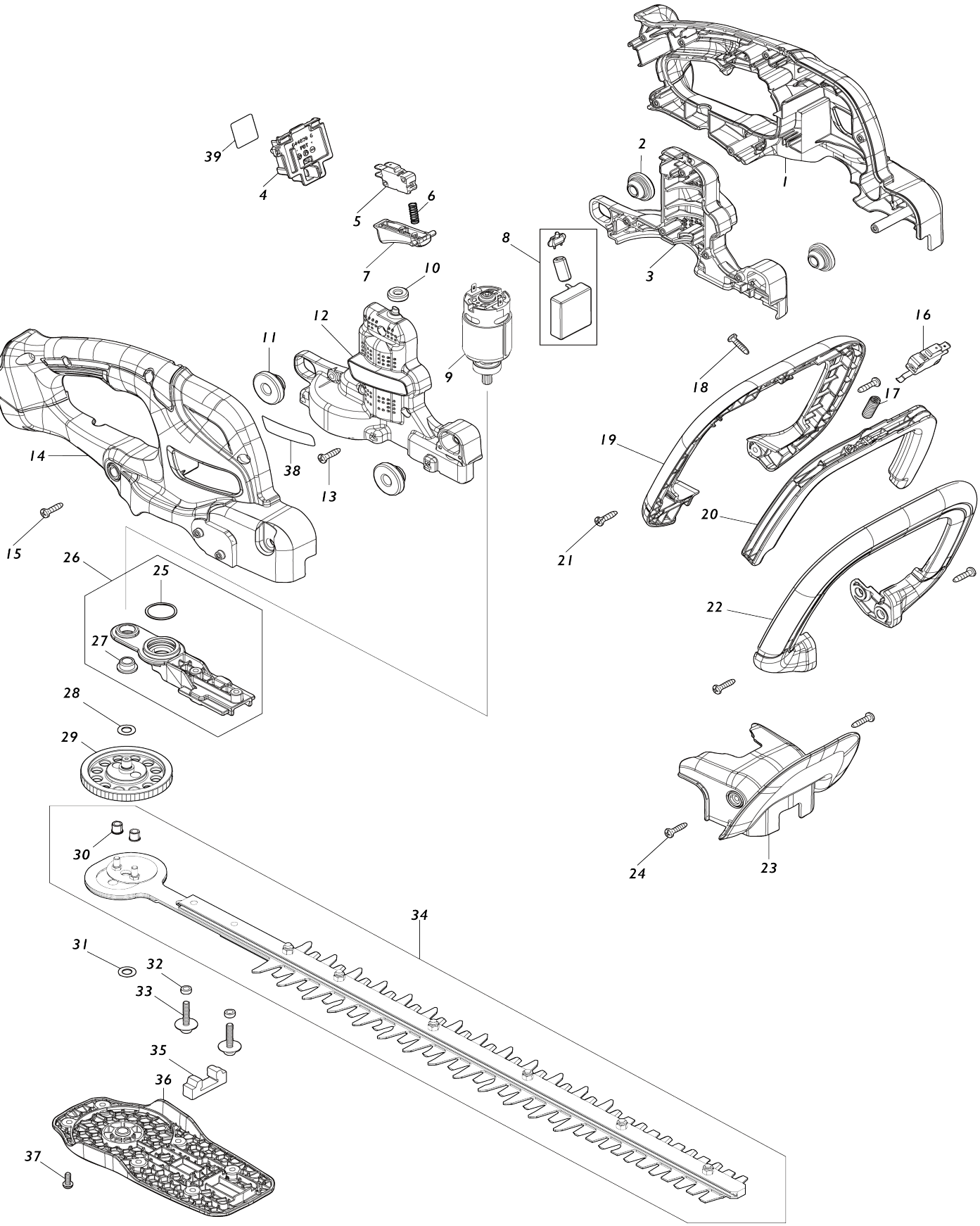

Model No.DUH507 Cordless Hedge Trimmer

Item No.	Parts No.	Description	Interchangeability	Q'ty	New/ Old	Note1	Note2
001	183Y38-1	Handle set		1	*		
C10	263005-3	Rubber pin 6		2	*		
C20	8062W1-7	Caution label		1	*		
001		INC. 14			*		
001-1	1830R3-6	Handle set	O	1			
C10	263005-3	Rubber pin 6		2			
C20	8074L4-9	Caution label	O	1			
001-1		INC. 14					
002	424394-3	Rubber ring 8		2			
003	183X36-9	Motor housing set		1			
C10	931102-0	Hex. nut M4		6			
003		INC. 12					
004	644809-6	Terminal		1			
005	650036-5	Switch DMU-1212D-020		1			
006	231372-4	Compression spring 5		1			
007	413M81-7	Switch lever R		1			
008	620L03-6	Controller		1			
009	629B93-6	DC motor		1			
010	424195-9	Rubber ring 6		1			
011	424394-3	Rubber ring 8		2			
012	183X36-9	Motor housing set		1			
C10	931102-0	Hex. nut M4		6			
012		INC. 3					
013	266326-2	Binding head tapping screw 4X18		5	*		
013-1	265B67-9	Binding head tapping screw 4X18	O	5			
014	183Y38-1	Handle set		1	*		
C10	263005-3	Rubber pin 6		2	*		
C20	8062W1-7	Caution label		1	*		
014		INC. 1			*		
014-1	1830R3-6	Handle set	O	1			
C10	263005-3	Rubber pin 6		2			
C20	8074L4-9	Caution label	O	1			
014-1		INC. 1					
015	266326-2	Binding head tapping screw 4X18		6	*		
015-1	265B67-9	Binding head tapping screw 4X18	O	6			
016	650037-3	Switch DMU-1212D-021		1			
017	231325-3	Compression spring 6		1			
018	266326-2	Binding head tapping screw 4X18		4	*		
018-1	265B67-9	Binding head tapping screw 4X18	O	4			
019	413M89-1	Front grip cover E		1			
020	413M90-6	Switch lever FE		1			
021	266326-2	Binding head tapping screw 4X18		4	*		

021-1	265B67-9	Binding head tapping screw 4X18	O	4			
022	413M88-3	Front grip E		1			
023	413M82-5	Protector		1			
024	266326-2	Binding head tapping screw 4X18		2	*		
024-1	265B67-9	Binding head tapping screw 4X18	O	2			
025	213961-7	O-ring 22		1			
026	136928-7	Bearing housing assembly		1			
026		INC. 25,27					
027	214064-0	Plane bearing 8		1			
028	253215-0	Flat washer 8		1			
029	136843-5	Gear assembly		1			
030	262570-9	Nylon sleeve 5		2			
031	253215-0	Flat washer 8		1			
032	257802-7	Ring 5		2			
033	265A89-3	Hex. socket head bolt M5X25 WR		2			
034	1911J1-6	Shear blade 500E set		1			
C10	188605-7	Oil vessel set		1			
034		INC. 30					
035	422904-0	Dust guard		1			
036	413M87-5	Under cover		1			
037	911118-1	Pan head screw M4X12 WR		6			
038	8582M6-3	Name plate DUH507		1			
039	8582M9-7	Serial No. label DUH507		1			
A01	413L91-8	Blade cover 500		1			
A02	450128-8	Battery cover		1			
A03B	***DC18WC	DC18WC BATTERY CHARGER		1			
A03B		COMPO-PARTS					
A03C	***DC18SD	DC18SD BATTERY CHARGER		1			
A03C		COMPO-PARTS					
A04	197600-6	Battery BL1830B set		1			
E01	800A43-6	Sound 86dB label		1	*		
E01-1	8022C7-3	Sound 87dB label	<	1			
F01	1910T1-0	Chip receiver 500 set		1			
F02	1911J1-6	Shear blade 500E set		1			