Model No.DUC357 Cordless Chain Saw

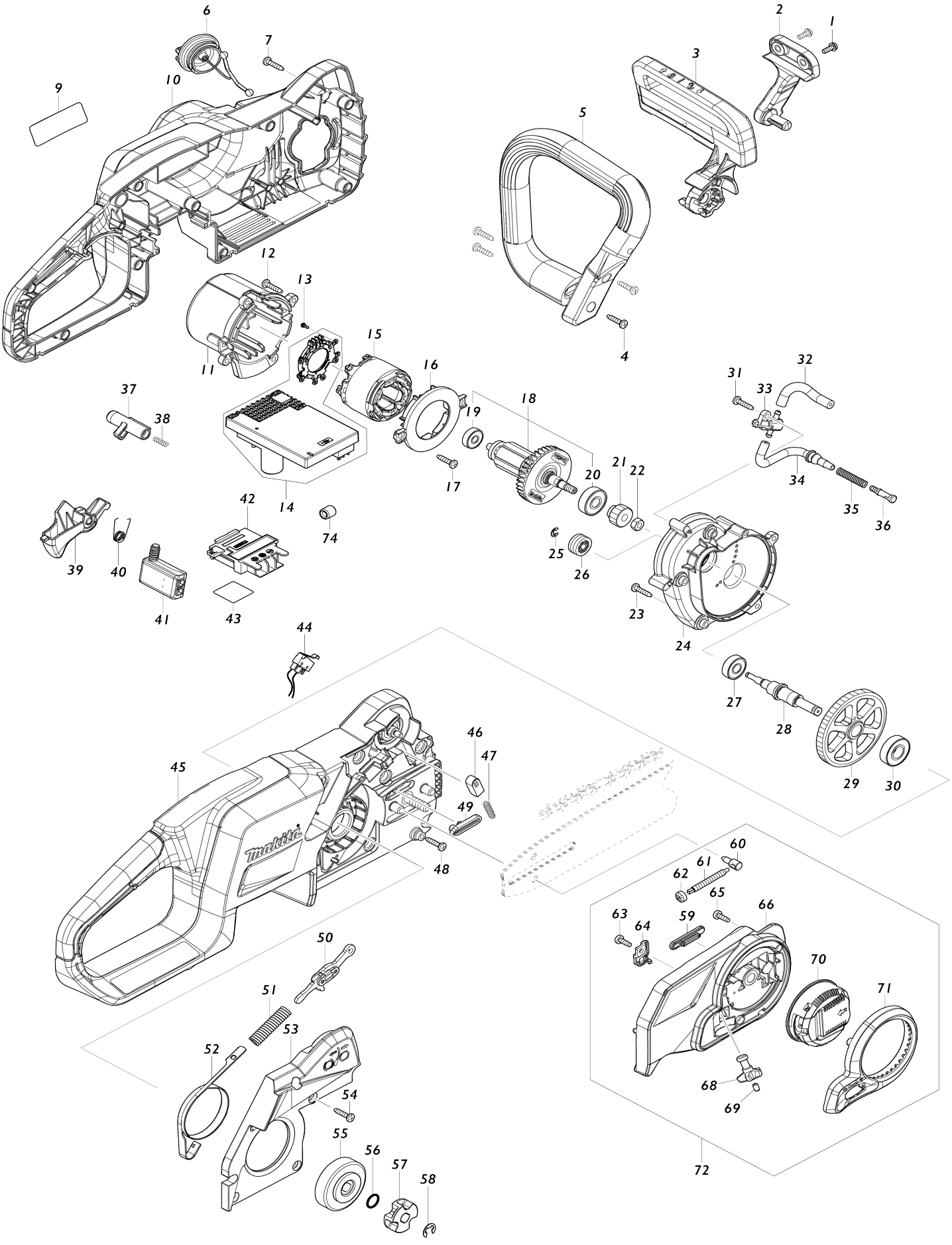

Model No.DUC357 Cordless Chain Saw

Item No.	Parts No.	Description	Interchangeability	Q'ty	New/ Old	Note1	Note2
001	911118-1	Pan head screw M4X12 WR		2			
002	413J87-7	Front hand guard retainer		1			
003	141K82-0	Front hand guard complete		1			
C10	810R21-0	Caution label		1			
004	266326-2	Binding head tapping screw 4X18		4	*		
004-1	265B67-9	Binding head tapping screw 4X18	O	4			
005	413J75-4	Front handle		1			
006	162C20-1	Tank cap complete		1	*		
C10	213A30-0	O-ring 29.5		1	*		
006-1	1415T2-8	TANK CAP COMPLETE	<	1			
C10	213A77-4	O-ring 29.5		1			
007	266326-2	Binding head tapping screw 4X18		9	*		
007-1	265B67-9	Binding head tapping screw 4X18	O	9			
009	858R06-8	Name plate DUC357		1			
010	183W84-2	Housing set		1	*		
C10	263005-3	Rubber pin 6		2	*		
C20	8057G1-2	Makita logo label		1	*		
010		INC. 45			*		
010-1	183W84-2	Housing set	O	1			
C10	263005-3	Rubber pin 6		2			
C20	8057G1-2	Makita logo label		1			
010-1		INC. 45					
011	413J76-2	Motor housing		1			
012	266326-2	Binding head tapping screw 4X18		4	*		
012-1	265B67-9	Binding head tapping screw 4X18	O	4			
013	652119-7	Pan head screw M2X6		6			
014	620J79-1	Controller		1			
015	629B62-7	Stator		1			
016	413J86-9	Baffle plate		1			
017	266326-2	Binding head tapping screw 4X18		2	*		
017-1	265B67-9	Binding head tapping screw 4X18	O	2			
018	519766-6	Rotor assembly		1	*		
018		INC. 19,20			*		
018-1	519766-6	Rotor assembly	O	1			
018-1		INC. 19,20					
019	211499-6	Ball bearing 626ZZ		1			
020	211092-6	Ball bearing 629DDW		1			
021	227989-9	Spur gear 16		1			
022	252186-8	Hex. nut M6		1			
023	266326-2	Binding head tapping screw 4X18		5	*		
023-1	265B67-9	Binding head tapping screw 4X1	O	5			

		8					
024	413J72-0	Bearing housing		1			
025	961011-9	Stop ring (EXT) E-4		1			
026	226884-0	Worm gear		1			
027	211032-4	Ball bearing 608ZZ		1			
028	327A29-0	Spindle		1			
029	227990-4	Spur gear 73		1			
030	210216-1	Ball bearing 6001DDW		1			
031	266326-2	Binding head tapping screw 4X18		1	*		
031-1	265B67-9	Binding head tapping screw 4X18	O	1			
032	422914-7	Oil tube 3-60		1			
033	141N25-0	Oil pump complete		1			
034	422913-9	Oil tube 3-105		1			
035	231975-4	Spring		1			
036	452666-6	Nipple		1			
037	413J88-5	Lock off button		1			
038	231469-9	Compression spring 4		1			
039	413J84-3	Switch lever		1			
040	233621-5	Torsion spring 9		1			
041	651083-9	Switch C3XA-1PSPM		1			
042	643874-2	Terminal		1			
043	858R13-1	Serial No. label DUC357		1			
044	632L48-2	Switch unit		1			
045	183W84-2	Housing set		1	*		
C10	263005-3	Rubber pin 6		2	*		
C20	8057G1-2	Makita logo label		1	*		
045		INC. 10			*		
045-1	183W84-2	Housing set	O	1			
C10	263005-3	Rubber pin 6		2			
C20	8057G1-2	Makita logo label		1			
045-1		INC. 10					
046	313212-9	Hand guard guide		1			
047	234210-9	Compression spring 3		1			
048	266326-2	Binding head tapping screw 4X18		1	*		
048-1	265B67-9	Binding head tapping screw 4X18	O	1			
049	422915-5	Grommet		1			
050	141E60-4	Link plate complete		1			
051	232452-9	Compression spring 7		1			
052	347864-4	Brake band		1			
053	413J85-1	Housing R cover		1			
054	266326-2	Binding head tapping screw 4X18		5	*		
054-1	265B67-9	Binding head tapping screw 4X18	O	5			
055	162B78-4	Brake drum		1			
056	213060-5	O-ring 10		1	*		
056-1	213A41-5	O-ring 10	O	1			
057	221464-7	Sprocket 6		1			
058	961013-5	Stop ring (EXT) E-7		1			

059	422833-7	Grommet		1			
060	326310-0	Adjust pin		1			
061	327958-1	Adjust screw		1			
062	227496-2	Straight bevel gear 14		1			
063	266427-6	Binding head tapping screw 4X12		1	*		
063-1	265E32-6	TAPPING SCREW 4X12	O	1			
064	413F29-7	Cover		1			
065	266427-6	Binding head tapping screw 4X12		3	*		
065-1	265E32-6	TAPPING SCREW 4X12	O	3			
066	413J73-8	Sprocket cover		1			
068	142665-3	Drive gear complete		1			
069	263002-9	Rubber pin 4		1			
070	142235-8	Nut complete		1			
071	454819-3	Nut cover		1			
072	136784-5	Sprocket cover assembly		1			
072		INC. 59-66,68-71					
074	688164-6	Line filter		1			
A01	191G16-9	Guide bar 14 set		1			
A02	413G23-5	Guide bar case 360		1	*		
A02-1	413G23-5	Guide bar case 360	O	1			
A03	191H02-6	Saw chain 14 set		1			
A04	199897-3	Oil vessel set		1			
A06	***DC18RC	DC18RC FAST CHARGER		1			
A06		COMPO-PARTS					
A07	197280-8	Battery BL1850B set		1			
E01	891805-7	Sound 98dB label		1			
F01	191G15-1	Guide bar 12 set		1			
F02	191G16-9	Guide bar 14 set		1			
F03	191G17-7	Guide bar 16 set		1			
F04	191G23-2	Guide bar 12 set		1			
F05	191G24-0	Guide bar 14 set		1			
F06	191G25-8	Guide bar 16 set		1			
F07	191H01-8	Saw chain 12 set		1			
F08	191H02-6	Saw chain 14 set		1			
F09	191H03-4	Saw chain 16 set		1			
F10	191H10-7	Saw chain 12 set		1			
F11	191H11-5	Saw chain 14 set		1			
F12	191H12-3	Saw chain 16 set		1			
F13	195923-6	Round file 4.5 set		1	*		
F13-1	D-70954	FILE HOLDER SET 4.5MM(11/64")	O	1			
F14	198457-8	File set		1	*		
F14-1	D-70948	FILE HOLDER SET 4.0MM(5/32")	O	1			
F15	199063-2	Sprocket 6 set		1			
F20	1914F2-4	Saw chain 12 set		1	*		
F20-1	1914F2-4	Saw chain 12 set	O	1			
F21	1914F3-2	Saw chain 14 set		1	*		
F21-1	1914F3-2	Saw chain 14 set	O	1			
F22	1914F4-0	Saw chain 16 set		1	*		
F22-1	1914F4-0	Saw chain 16 set	O	1			
F23	1914F6-6	Saw chain 12 set		1	*		

F23-1	1914F6-6	Saw chain 12 set	O	1			
F24	1914F7-4	Saw chain 14 set		1	*		
F24-1	1914F7-4	Saw chain 14 set	O	1			
F25	1914F8-2	Saw chain 16 set		1	*		
F25-1	1914F8-2	Saw chain 16 set	O	1			

Please state Parts No. when your order.

Print Date 10/12/2026