Model No.DUC355 Cordless Chain Saw

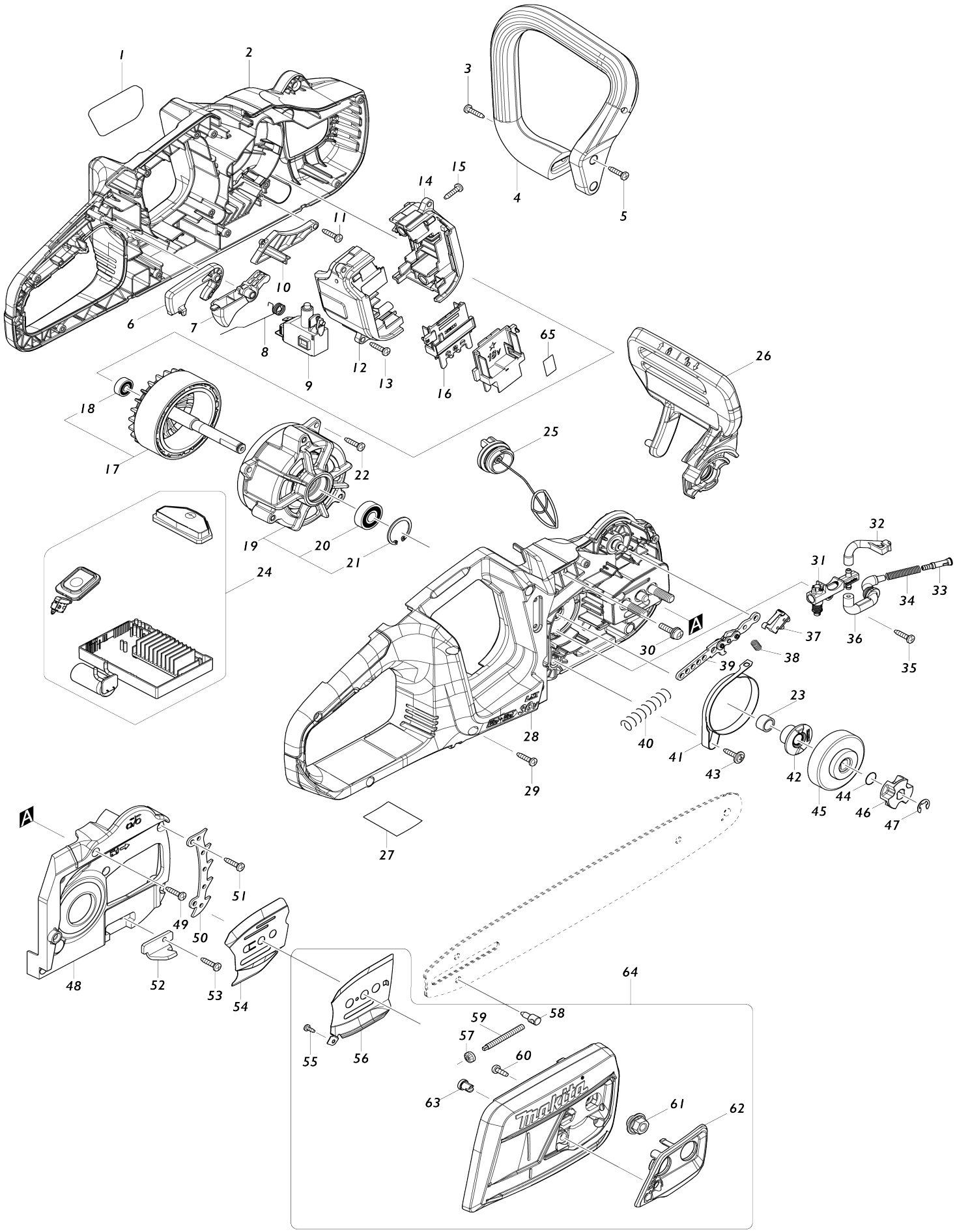

Model No.DUC355 Cordless Chain Saw

Item No.	Parts No.	Description	Interchangeability	Q'ty	New/ Old	Note1	Note2
001	818F45-8	Model No. label DUC355		1	*		
001-1	810R17-1	Model No. label DUC353	O	1			
002	183K81-6	Housing set		1	*		
C10	812D15-7	Caution label		1	*		
002		INC. 28			*		
002-1	183K81-6	Housing set	O	1			
C10	812D15-7	Caution label		1			
002-1		INC. 28					
003	266326-2	Binding head tapping screw 4X18		2			
004	457007-1	Front handle		1			
005	266326-2	Binding head tapping screw 4X18		2			
006	457013-6	Catch lever		1			
007	457006-3	Switch lever		1			
008	232318-3	Torsion spring 10		1			
009	650781-2	Switch C3JW-6B-P		1			
010	457010-2	Housing L cover		1			
011	266326-2	Binding head tapping screw 4X18		1			
012	183F15-9	Terminal box set		1			
C10	263005-3	Rubber pin 6		4			
012		INC. 14					
013	266326-2	Binding head tapping screw 4X18		4			
014	183F15-9	Terminal box set		1			
C10	263005-3	Rubber pin 6		4			
014		INC. 12					
015	266326-2	Binding head tapping screw 4X18		2			
016	643874-2	Terminal		2			
017	519411-3	Rotor assembly		1			
017		INC. 18					
018	210028-2	Ball bearing 606ZZ		1			
019	592H45-5	Stator assembly		1	*		
019		INC. 20,21			*		
019-1	590094-8	Stator assembly	O	1			
019-1		INC. 20,21					
020	210059-1	Ball bearing 6000DDW		1	*		
020-1	210274-7	Ball bearing 6000DDW	O	1			
021	962105-3	Retaining ring (INT) R-26		1			
022	266326-2	Binding head tapping screw 4X18		3			
023	257402-3	Sleeve 10		1			
024	144254-0	Controller complete		1	*		
024-1	141G22-4	Controller complete	<	1			
025	168508-1	Tank cap complete		1	*		
C10	213355-6	O-ring 25		1	*		
025-1	162A04-7	Tank cap complete	O	1			

C11	213A11-4	O-ring 25	O	1			
026	458418-3	Front hand guard		1			
027	855A12-2	Name plate DUC355		1			
028	183K81-6	Housing set		1	*		
C10	812D15-7	Caution label		1	*		
028		INC. 2			*		
028-1	183K81-6	Housing set	O	1			
C10	812D15-7	Caution label		1			
028-1		INC. 2					
029	266326-2	Binding head tapping screw 4X18		8			
030	911233-1	Pan head screw M5X20 WR		3			
031	142156-4	Oil pump complete		1	*		
031-1	142156-4	Oil pump complete	O	1			
032	424904-6	Connector B		1			
033	452666-6	Nipple		1	*		
033-1	452666-6	Nipple	O	1			
034	234207-8	Compression spring 6		1	*		
034-1	231975-4	Spring	O	1			
035	266326-2	Binding head tapping screw 4X18		1			
036	424903-8	Connector A		1			
037	632H47-0	Switch unit		1			
038	231298-0	Compression spring 6		1			
039	163448-8	Link plate complete		1			
040	232319-1	Compression spring 9		1			
041	345454-7	Brake band		1			
042	221427-3	Worm gear		1	*		
042-1	227C29-1	Worm gear	O	1			
043	265620-9	Flange tapping screw 4X18		1			
044	213060-5	O-ring 10		1			
045	161891-5	Brake drum complete		1	*		
045-1	313422-8	Brake drum	O	1			
046	221464-7	Sprocket 6		1			
047	961013-5	Stop ring (EXT) E-7		1			
048	457004-7	Housing R cover		1			
049	266326-2	Binding head tapping screw 4X18		4			
050	347078-5	Spike bumper		1			
051	266326-2	Binding head tapping screw 4X18		2			
052	347079-3	Chain catcher		1			
053	266326-2	Binding head tapping screw 4X18		1			
054	346694-0	Guide plate ES		1			
055	266166-8	Binding head tapping screw 3X8		2			
056	346699-0	Guide plate CS		1			
057	227496-2	Straight bevel gear 14		1			
058	326311-8	Adjust pin		1			
059	326313-4	Adjust screw		1			
060	266427-6	Binding head tapping screw 4X12		2	*		
060-1	265C54-4	Tapping screw 4X12	O	2			

061	162493-0	Flange nut complete		2	*		
061-1	162493-0	Flange nut complete	O	2			
062	454620-6	Nut cover		1			
063	227620-7	Drive gear		1			
064	136071-2	Sprocket cover assembly		1			
064		INC. 55-63			*		
064		INC. 55-63,66					
065	855A18-0	Serial No. label DUC355		1			
066	458871-3	Sprocket cover		1			
A01	782027-9	Box wrench		1	*		
A01-1	782042-3	Box wrench 13	O	1			
A02	165246-6	Guide bar		1	*		
A02-1	165246-6	Guide bar	O	1			
A03	419288-5	Chain cover		1	*		
A03-1	419288-5	Chain cover	O	1			
A04	196741-5	Saw chain set		1	*		
A04-1	191H02-6	Saw chain 14 set	O	1			
F07-2	1911A1-3	Guide bar 10 set	<	1			
F09	195092-3	Chain oil set		1			
F10	195093-1	Chain oil set		1			
F12	195923-6	Round file 4.5 set		1	*		
F12-1	D-70954	FILE HOLDER SET 4.5MM(11/64")	O	1			
F13	196206-7	Saw chain set		1	*		
F22	196740-7	Saw chain set		1	*		
F22-1	191H01-8	Saw chain 12 set	O	1			
F25	198259-2	Sprocket 9 set		1			
F27	198457-8	File set		1	*		
F27-1	D-70948	FILE HOLDER SET 4.0MM(5/32")	O	1			
F28	199297-7	Battery bag set		1			
F32	1914F2-4	Saw chain 12 set		1	*		
F32-1	1914F2-4	Saw chain 12 set	O	1			
F33	1914F3-2	Saw chain 14 set		1	*		
F33-1	1914F3-2	Saw chain 14 set	O	1			
F34	1914F4-0	Saw chain 16 set		1	*		
F34-1	1914F4-0	Saw chain 16 set	O	1			
F35	1914F6-6	Saw chain 12 set		1	*		
F35-1	1914F6-6	Saw chain 12 set	O	1			
F36	1914F7-4	Saw chain 14 set		1	*		
F36-1	1914F7-4	Saw chain 14 set	O	1			
F37	1914F8-2	Saw chain 16 set		1	*		
F37-1	1914F8-2	Saw chain 16 set	O	1			
G13	1911A1-3	Guide bar 10 set		1			