Model No.DUC306 Cordless Chain Saw

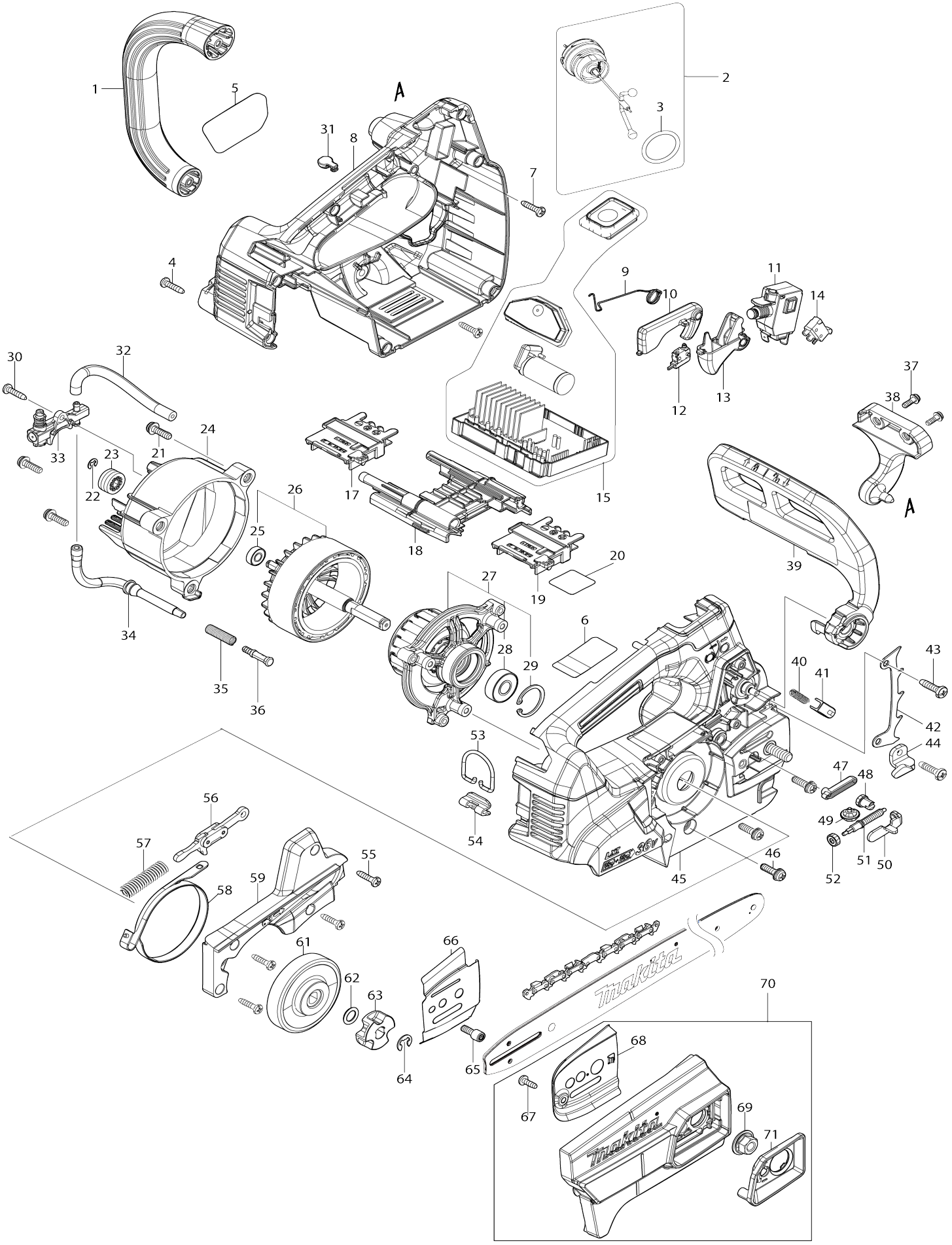

Model No.DUC306 Cordless Chain Saw

Item No.	Parts No.	Description	Interchangeability	Q'ty	New/ Old	Note1	Note2
001	459275-2	Front handle		1			
002	126832-8	Tank cap assembly		1			
002		INC. 3					
003	213355-6	O-ring 25		1	*		
003-1	213894-6	O-ring 25	O	1	*		
003-2	213A11-4	O-ring 25	O	1			
004	266326-2	Binding head tapping screw 4X18		9			
005	819S63-7	Model No. label DUC306		1	*		
005-1	810R17-1	Model No. label DUC353	O	1			
006	856A24-8	Name plate DUC306		1	*		
006-1	856A24-8	Name plate DUC306	O	1			
007	266326-2	Binding head tapping screw 4X18		2			
008	183N15-7	Housing set		1	*		
C10	263005-3	Rubber pin 6		2	*		
C20	424170-5	Valve		1	*		
C30	454724-4	Sinter insert		1	*		
008		INC. 45			*		
008-1	183N15-7	Housing set	O	1			
C10	263005-3	Rubber pin 6		2			
C20	424170-5	Valve		1			
C30	454724-4	Sinter insert		1			
008-1		INC. 45					
009	232509-6	Torsion spring 10		1			
010	459268-9	Catch lever		1			
011	651365-9	Switch C3JW-6BM-P		1			
012	632L49-0	Switch unit		1			
013	459267-1	Switch lever		1			
014	632L48-2	Switch unit		1			
015	140K82-7	Controller complete		1	*		
C10	819R38-0	Indication label		1	*		
C20	819S81-5	Switch label		1	*		
015-1	141J62-0	Controller complete	<	1			
C10	819R38-0	Indication label		1			
C20	819S81-5	Switch label		1			
017	643874-2	Terminal		1			
018	140K81-9	Center case complete		1	*		
C10	263005-3	Rubber pin 6		2	*		
018-1	140V36-0	Center case complete	<	1			
C10	263005-3	Rubber pin 6		2			
019	643874-2	Terminal		1			
020	856A29-8	Serial No. label DUC306		1			
021	911228-4	Pan head screw M5X18 WR		3			
022	961011-9	Stop ring (EXT) E-4		1			
023	226884-0	Worm gear		1			
024	459276-0	Motor housing		1			
025	210026-6	Ball bearing 696ZZ		1			

026	519576-1	Rotor assembly		1			
026		INC. 25					
027	529420-4	Stator assembly		1	*		
027		INC. 28,29			*		
027-1	520146-1	Stator assembly	O	1			
027-1		INC. 28,29					
028	210059-1	Ball bearing 6000DDW		1	*		
028-1	210274-7	Ball bearing 6000DDW	O	1			
029	962105-3	Retaining ring (INT) R-26		1			
030	266326-2	Binding head tapping screw 4X18		1			
031	422467-6	Cap		1			
032	422451-1	Oil tube 3-100		1			
033	142156-4	Oil pump complete		1	*		
033-1	142156-4	Oil pump complete	O	1			
034	422452-9	Oil tube 3-130		1			
035	231975-4	Spring		1			
036	452666-6	Nipple		1	*		
036-1	452666-6	Nipple	O	1			
037	911118-1	Pan head screw M4X12 WR		2			
038	459270-2	Front hand guard retainer		1			
039	140K79-6	Front hand guard complete		1			
C10	819S75-0	Caution label		1			
040	234210-9	Compression spring 3		1			
041	313212-9	Hand guard guide		1			
042	346809-9	Spike bumper		1			
043	266420-0	Binding head tapping screw 5X20		2	*		
043-1	265C57-8	Tapping screw 5X20	O	2			
044	347516-7	Chain catcher		1			
045	183N15-7	Housing set		1	*		
C10	263005-3	Rubber pin 6		2	*		
C20	424170-5	Valve		1	*		
C30	454724-4	Sinter insert		1	*		
045		INC. 8			*		
045-1	183N15-7	Housing set	O	1			
C10	263005-3	Rubber pin 6		2			
C20	424170-5	Valve		1			
C30	454724-4	Sinter insert		1			
045-1		INC. 8					
046	911228-4	Pan head screw M5X18 WR		3			
047	422466-8	Grommet		1			
048	227620-7	Drive gear		1			
049	227634-6	Straight bevel gear 14		1			
050	347517-5	Tension slide		1			
051	327317-9	Adjust screw		1			
052	227496-2	Straight bevel gear 14		1			
053	281222-3	Hook		1			
054	347514-1	Hook support		1			
055	266326-2	Binding head tapping screw 4X18		4			
056	140A74-6	Link plate complete		1			

057	232452-9	Compression spring 7		1			
058	347515-9	Brake band complete		1			
059	459273-6	Housing R cover		1			
061	162638-0	Brake drum complete		1			
062	213060-5	O-ring 10		1			
063	221464-7	Sprocket 6		1			
064	961013-5	Stop ring (EXT) E-7		1			
065	266905-6	Hexalobular socket head bolt M5 X12		1			
066	347533-7	Guide plate L		1			
067	266427-6	Binding head tapping screw 4X12		1	*		
067-1	265C54-4	Tapping screw 4X12	O	1			
068	347534-5	Guide plate R		1			
069	162494-8	Flange nut complete		1			
070	136138-6	Sprocket cover assembly		1			
070		INC. 67-69,71					
071	459278-6	Nut cover		1			
A01	165245-8	Guide bar		1	*		
A01-1	165245-8	Guide bar	O	1			
A02	419288-5	Chain cover		1	*		
A02-1	419288-5	Chain cover	O	1			
A03	196740-7	Saw chain set		1	*		
A03-1	191H01-8	Saw chain 12 set	O	1			
A04	199897-3	Oil vessel set		1			
A05	782023-7	Wrench 13-16		1	*		
A05-1	782042-3	Box wrench 13	O	1			
A06B	***DC18RD	DC18RD TWO PORT FAST CHARGER		1			
A06B		COMPO-PARTS					
A07B	197280-8	Battery BL1850B set		2			
E01	817D83-5	Caution tag		1	*		
E01-1	8032W7-6	Caution tag	<	1			
E02	805011-8	Sound 103dB label		1			
F10-2	1911A1-3	Guide bar 10 set	<	1			
F13	195093-1	Chain oil set		1			
F14	195923-6	Round file 4.5 set		1	*		
F14-1	D-70954	FILE HOLDER SET 4.5MM(11/64")	O	1			
F15	196205-9	Saw chain set		1	*		
F15-1	191H08-4	Saw chain 10 set	O	1			
F16	196206-7	Saw chain set		1	*		
F25	196740-7	Saw chain set		1	*		
F25-1	191H01-8	Saw chain 12 set	O	1			
F28	198259-2	Sprocket 9 set		1			
F29	198457-8	File set		1	*		
F29-1	D-70948	FILE HOLDER SET 4.0MM(5/32")	O	1			
F30	199063-2	Sprocket 6 set		1			
F31	199075-5	Saw chain set		1	*		
F35	191T85-8	Guide bar 10 set		1			
F36	191T89-0	Saw chain 10 set		1			
F38	191T86-6	Guide bar 12 set		1			
F39	191T90-5	Saw chain 12 set		1			

F40	191T87-4	Guide bar 14 set		1			
F41	191T91-3	Saw chain 14 set		1			
F42	191T88-2	Guide bar 16 set		1			
F43	191T92-1	Saw chain 16 set		1			
F44	1910T9-4	Chain oil mineral set		1			
F45	1910U8-3	Chain oil mineral set		1			
F46	1910U5-9	Hydraulic oil HLP 46 set		1	*		
F47	1910U6-7	Corrosion protection oil set		1			
F48	199897-3	Oil vessel set		1			
F49	1914F1-6	Saw chain 10 set		1	*		
F49-1	1914F1-6	Saw chain 10 set	O	1			
F50	1914F2-4	Saw chain 12 set		1	*		
F50-1	1914F2-4	Saw chain 12 set	O	1			
F51	1914F3-2	Saw chain 14 set		1	*		
F51-1	1914F3-2	Saw chain 14 set	O	1			
F52	1914F4-0	Saw chain 16 set		1	*		
F52-1	1914F4-0	Saw chain 16 set	O	1			
F53	1914F5-8	Saw chain 10 set		1	*		
F53-1	1914F5-8	Saw chain 10 set	O	1			
F54	1914F6-6	Saw chain 12 set		1	*		
F54-1	1914F6-6	Saw chain 12 set	O	1			
F55	1914F7-4	Saw chain 14 set		1	*		
F55-1	1914F7-4	Saw chain 14 set	O	1			
F56	1914F8-2	Saw chain 16 set		1	*		
F56-1	1914F8-2	Saw chain 16 set	O	1			
G13	1911A1-3	Guide bar 10 set		1			