Model No.DUB361 Cordless Blower

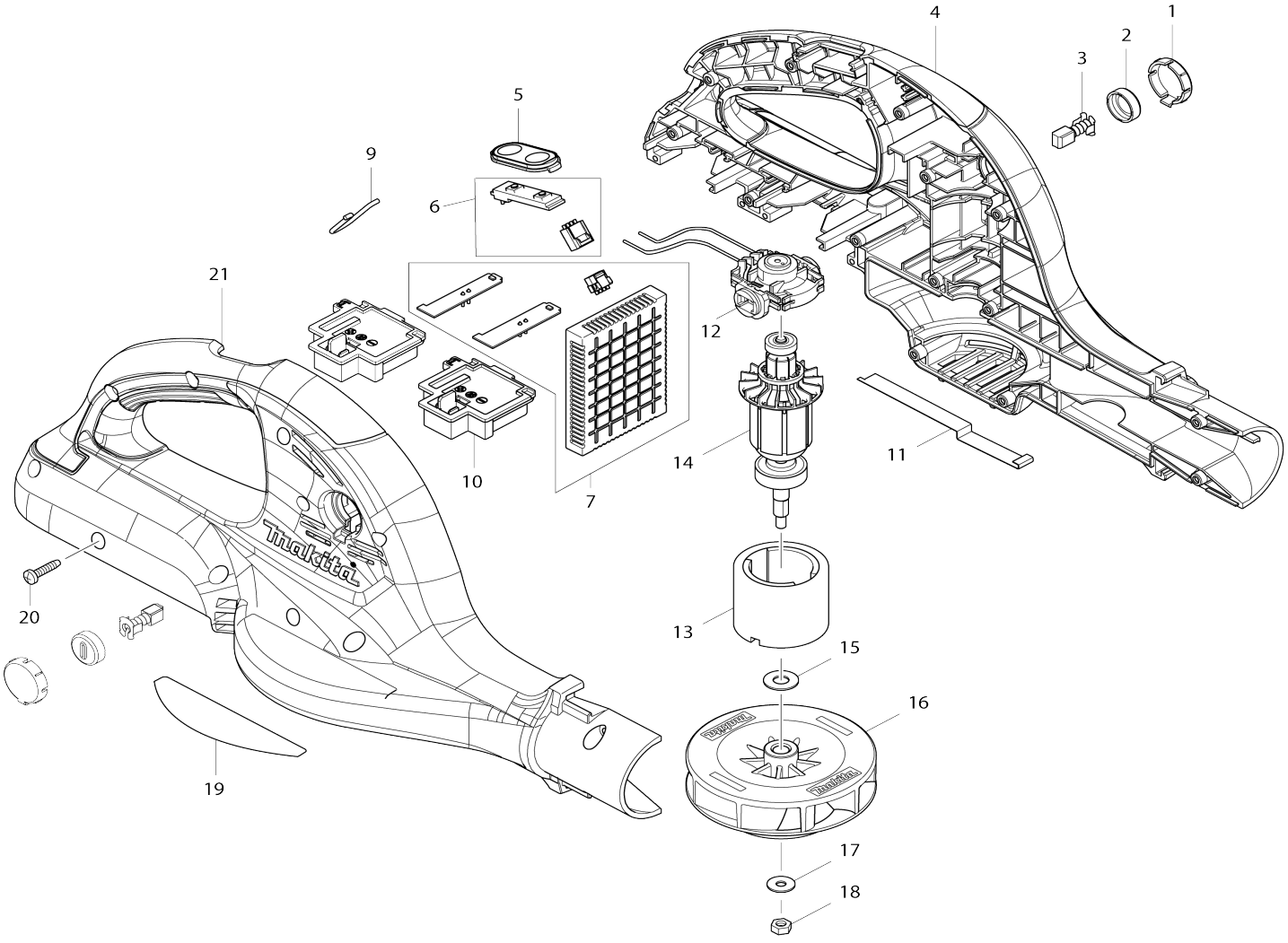

Model No.DUB361 Cordless Blower

Item No.	Parts No.	Description	Interchangeability	Q'ty	New/ Old	Note1	Note2
001	452145-4	Holder cap cover		2			
002	643929-3	Holder cap		2			
003	191971-3	Carbon brush set CB-430		1			
004	187850-1	Housing set		1	*		
C10	263005-3	Rubber pin 6		4	*		
C20	891050-4	Caution label		1	*		
004		INC. 21			*		
004-1	1833B2-4	HOUSING SET	<	1			
C10	263005-3	Rubber pin 6		4			
C20	8101W9-9	CAUTION LABEL		1			
004-1		INC. 21					
005	140463-9	Switch plate complete		1			
006	620282-4	Switch complete		1			
007	620276-9	Controller		1			
009	325973-9	Hanger		1			
010	644808-8	Terminal		2			
011	346328-5	Earth plate		1			
012	632B93-7	End bell complete		1			
013	638420-4	Yoke unit		1			
014	619260-9	Armature		1			
015	253865-1	Flat washer 8		1			
016	240124-2	Fan 95		1			
017	253194-2	Flat washer 5		1			
018	252177-9	Hex. nut M5-8		1			
019	815N43-1	Name plate DUB361		1			
020	265995-6	Binding head tapping screw 4X18		14			
021	187850-1	Housing set		1	*		
C10	263005-3	Rubber pin 6		4	*		
C20	891050-4	Caution label		1	*		
021		INC. 4			*		
021-1	1833B2-4	HOUSING SET	<	1			
C10	263005-3	Rubber pin 6		4			
C20	8101W9-9	CAUTION LABEL		1			
021-1		INC. 4					
A01	166095-4	Shoulder belt		1	*		
A01-1	122D94-0	Band assembly	O	1			
A02	452123-4	Long nozzle		1			
A03C	***DC18RC	DC18RC FAST CHARGER		1			
A04C	196399-0	Battery BL1840 set		2	*		
A04-1C	197265-4	Battery BL1840B set	<	2	*		
A04-2C	197265-4	Battery BL1840B set	O	2			
A05C	450128-8	Battery cover		2			
E01	688165-4	Line filter		1			
E02	807811-2	Sound 96dB label		1	*		
E02-1	891805-7	Sound 98dB label	<	1			

F06-3	197606-4	Battery BL1830B set (2 pcs)	O	1	*		
F07-3	197600-6	Battery BL1830B set	O	1			
F08-4	197599-5	Battery BL1830B set	O	1			
F09	197718-3	Adapter set		1			
F12	1917G3-7	Harness cover set		1			

Please state Parts No. when your order.

Print Date 08/28/2026