Model No.DUB186 Cordless Blower

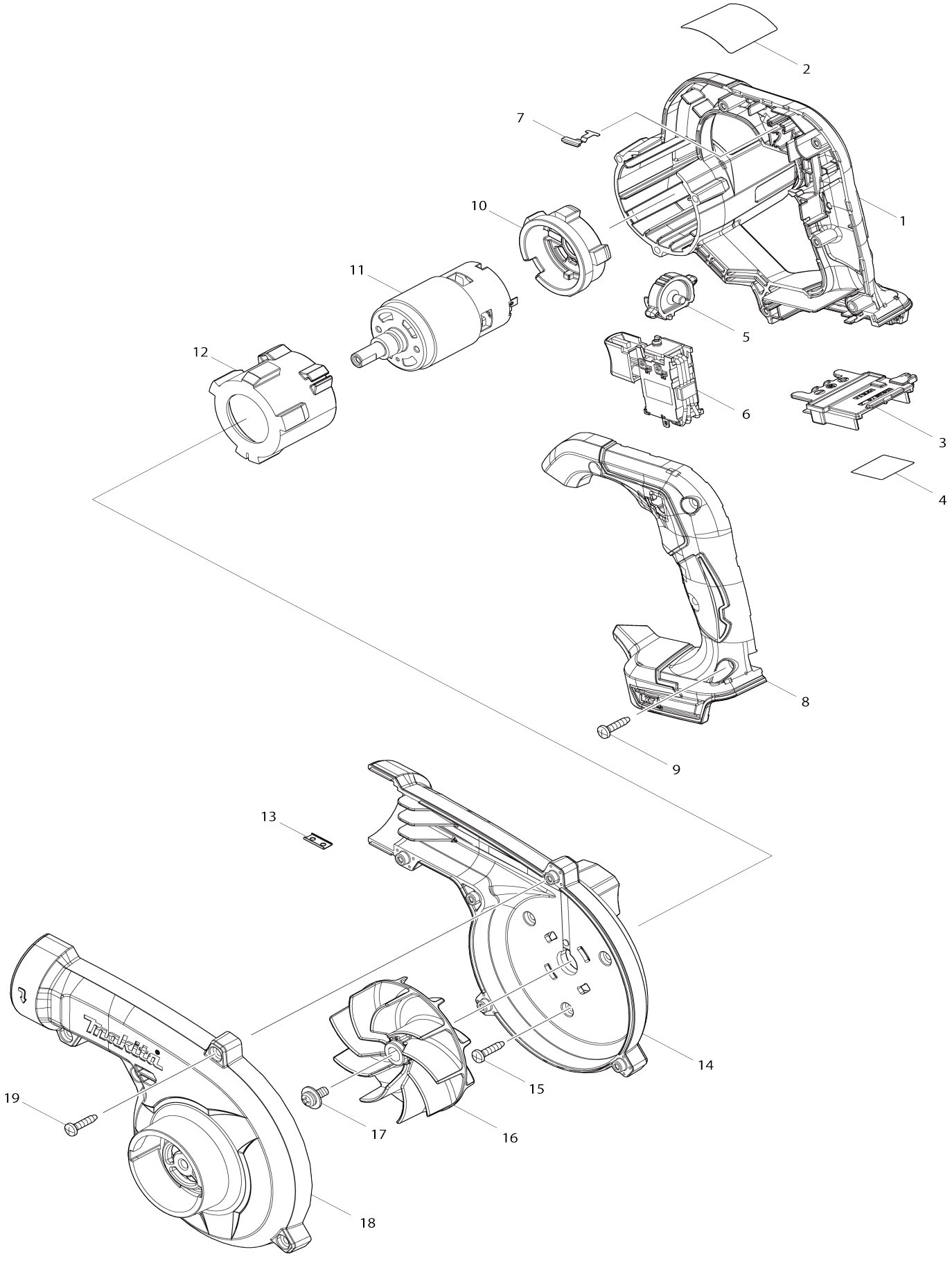

Model No.DUB186 Cordless Blower

Item No.	Parts No.	Description	Interchangeability	Q'ty	New/ Old	Note1	Note2
001	183P63-8	Motor housing set		1			
001		INC. 8					
002	856X46-6	Name plate DUB186		1			
003	643874-2	Terminal		1			
004	856X53-9	Serial No. label DUB186		1			
005	412573-5	Dial		1			
006A	632P93-1	Switch unit		1	*		
006-1A	632R69-0	Switch unit	<	1			
C10	654086-2	Receptacle 42486-2		2			
006-1	632R69-0	Switch unit		1			
C10	654086-2	Receptacle 42486-2		2			
007	232620-4	Leaf spring		1			
008	183P63-8	Motor housing set		1			
008		INC. 1					
009	266326-2	Binding head tapping screw 4X18		5			
010	422589-2	Motor rubber ring B		1			
011	629484-9	DC motor		1			
012	422588-4	Motor rubber ring A		1			
013	345998-7	Set plate		1			
014	140U56-8	Fan housing complete		1	*		
C10	8012T7-9	Caution label		1	*		
014-1	1415E0-7	FAN HOUSING COMPLETE	<	1			
C10	8101V9-2	CAUTION LABEL		1			
015	266326-2	Binding head tapping screw 4X18		3			
016	240210-9	Fan 85		1			
017	265B25-5	Pan head screw M5X12 WG		1	*		
017-1	265E75-8	Pan head screw M5X12 WG	<	1			
017-1C	265E75-8	Pan head screw M5X12 WG		1			
018	412572-7	Fan cover		1			
019	266326-2	Binding head tapping screw 4X18		5			
A02	191G09-6	Garden nozzle assembly set		1			
C10	412574-3	Joint		1			
A03	450128-8	Battery cover		1			
A04B	***DC18SD	DC18SD BATTERY CHARGER		1			
A04B		COMPO-PARTS					
A04C	***DC18RC	DC18RC FAST CHARGER		1			
A04C		COMPO-PARTS					
A05	197600-6	Battery BL1830B set		1			
A06	123245-4	Nozzle assembly		1			
E01	807950-8	Sound 95dB label		1			
F06	192236-6	Anchor nozzle set		1			

Please state Parts No. when your order.

Print Date 08/28/2026