Model No.DUB184 Cordless Blower

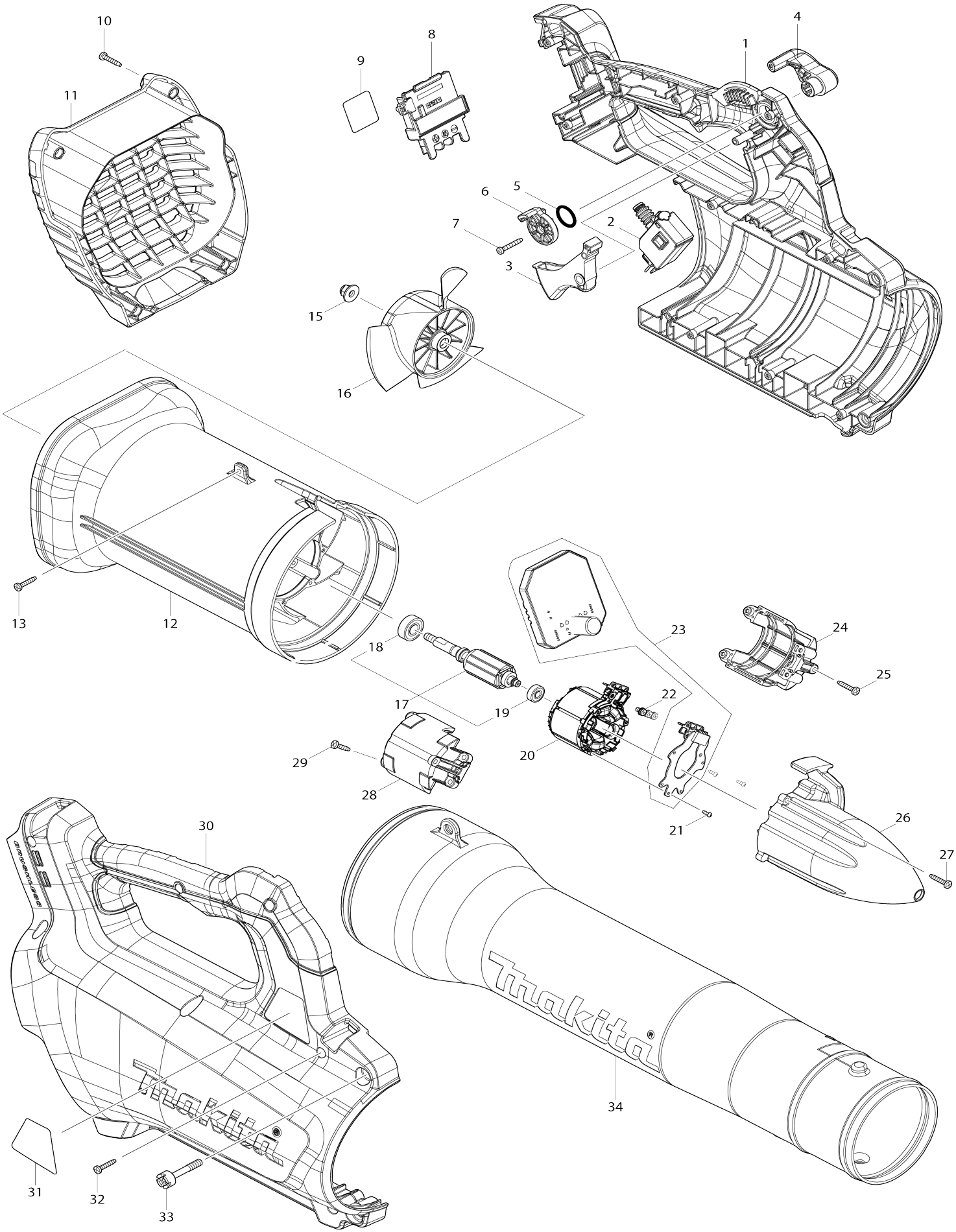

Model No.DUB184 Cordless Blower

Item No.	Parts No.	Description	Interchangeability	Q'ty	New/ Old	Note1	Note2
001	183M74-5	Housing set		1	*		
C10	263005-3	Rubber pin 6		2	*		
C20	806D81-4	Caution label		1	*		
001		INC. 30			*		
001-1	183N88-0	Housing set	<	1	*		
C10	263005-3	Rubber pin 6		2	*		
C20	806D81-4	Caution label		1	*		
C21	8011Y4-4	Caution label	O	1	*		
001-1		INC. 30			*		
001-2	183N88-0	Housing set	O	1	*		
C10	263005-3	Rubber pin 6		2	*		
C21	8012T7-9	Caution label	O	1	*		
001-2		INC. 30			*		
001-3	183N88-0	Housing set	O	1	*		
C10	263005-3	Rubber pin 6		2	*		
C21	8012T7-9	Caution label	O	1	*		
001-3		INC. 30			*		
001-4	1833C2-1	HOUSING SET	<	1			
C10	263005-3	Rubber pin 6		2			
C21	8101V9-2	CAUTION LABEL		1			
001-4		INC. 30					
002	651395-0	Switch C3JW-6B-PA6N		1			
003	459696-8	Switch lever		1			
004	459697-6	Control lever		1			
005	213154-6	O-ring 14		1			
006	459698-4	Link		1			
007	266127-8	Pan head tapping screw 3X20		1			
008	643874-2	Terminal		1			
009	856D78-3	Serial No. label DUB184		1			
010	266130-9	Binding head tapping screw 3X16		4			
011	459699-2	Rear cover		1			
012	459695-0	Fan housing		1			
013	266130-9	Binding head tapping screw 3X16		3			
015	252286-4	Collared hex. lock nut M5-8		1			
016	240177-1	Fan 110		1			
017	519580-0	Rotor assembly		1			
017		INC. 18,19					
018	210040-2	Ball bearing 698LLU		1			
019	211157-4	Ball bearing 695ZZ		1			
020	629292-8	Stator		1			
021	266490-9	Pan head tapping screw 2X6		3	*		
021-1	265C47-1	Pan head tapping screw 2X6	O	3			
022	652069-6	Flat head screw M3X6		3			
023	620B77-7	Controller		1	*		
023-1	620B77-7	Controller	O	1	*		
023-2	620L99-7	Controller	O	1			

024	183M64-8	Motor housing set		1			
024		INC. 28					
025	266130-9	Binding head tapping screw 3X16		2			
026	459700-3	Cap		1			
027	266130-9	Binding head tapping screw 3X16		3			
028	183M64-8	Motor housing set		1			
028		INC. 24					
029	266130-9	Binding head tapping screw 3X16		4			
030	183M74-5	Housing set		1	*		
C10	263005-3	Rubber pin 6		2	*		
C20	806D81-4	Caution label		1	*		
030		INC. 1			*		
030-1	183N88-0	Housing set	<	1	*		
C10	263005-3	Rubber pin 6		2	*		
C20	806D81-4	Caution label		1	*		
C21	8011Y4-4	Caution label	O	1	*		
030-1		INC. 1			*		
030-2	183N88-0	Housing set	O	1	*		
C10	263005-3	Rubber pin 6		2	*		
C21	8012T7-9	Caution label	O	1	*		
030-2		INC. 1			*		
030-3	183N88-0	Housing set	O	1	*		
C10	263005-3	Rubber pin 6		2	*		
C21	8012T7-9	Caution label	O	1	*		
030-3		INC. 1			*		
030-4	1833C2-1	HOUSING SET	<	1			
C10	263005-3	Rubber pin 6		2			
C21	8101V9-2	CAUTION LABEL		1			
030-4		INC. 30					
031	856D71-7	Name plate DUB184		1			
032	266130-9	Binding head tapping screw 3X16		9			
033	251570-4	Hex. socket head bolt M5X30		2			
034	459701-1	Front nozzle		1	*		
034-1	183P96-3	Front nozzle set	O	1			
A01	783202-0	Hex. wrench 4		1			
A02	166094-6	Shoulder belt		1	*		
A02-1	122J43-3	Band assembly	O	1			
C10	162E18-0	Cushion complete		1	*		
C20	162E17-2	Blower band		1	*		
A03	456957-7	Extension nozzle		1	*		
A03-1	183P97-1	Extension nozzle set	O	1			
A04	456958-5	Flat nozzle		1	*		
A04-1	183P98-9	Flat nozzle set	O	1			
A05	191B21-6	Adapter pipe 80-72 set		1	*		
A05-1	191L13-5	Adapter pipe 80-72 set	<	1			
A07	***DC18RC	DC18RC FAST CHARGER		1			
A07		COMPO-PARTS					
A08B	197280-8	Battery BL1850B set		1			
A08C	197600-6	Battery BL1830B set		1			

E01	807811-2	Sound 96dB label		1	*		
E01-1	807950-8	Sound 95dB label	<	1			
F02	191L13-5	Adapter pipe 80-72 set		1			
F03	197888-8	Extension nozzle set		1			
F04	197889-6	Flat nozzle set		1			
F06	191B03-8	Gutter nozzle set		1			
C10	459816-4	Extension pipe 72		3			
C20	162790-4	End nozzle complete		1			
C30	281030-2	Hose clamp 75-90		2			
C40	281031-0	Hose clamp 85-100		1			
F07	1915C8-7	Water blowing nozzle set		1			
F09	1917G3-7	Harness cover set		1			

Please state Parts No. when your order.

Print Date 08/28/2026