Model No.DTW700 Cordless Impact Wrench

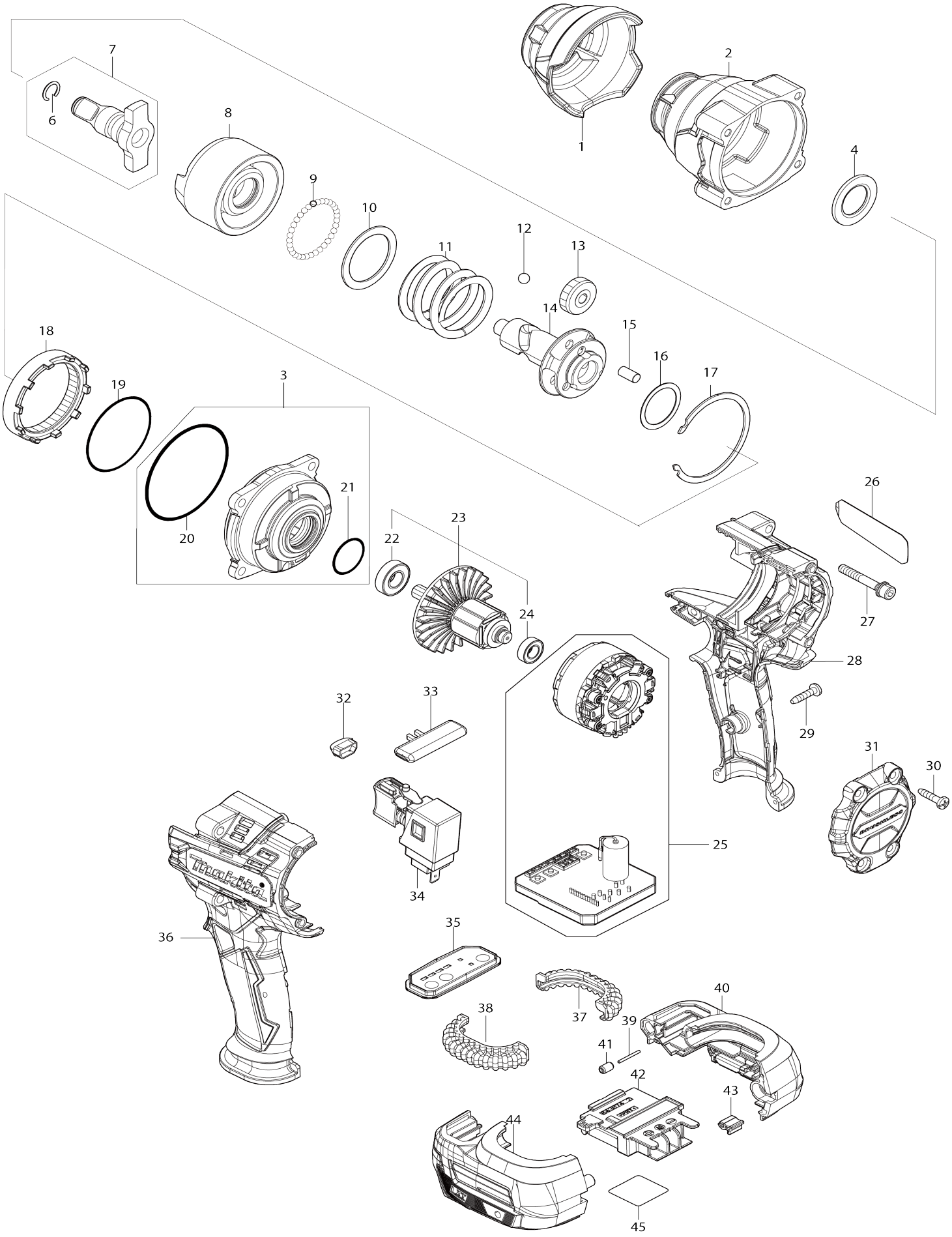

Model No.DTW700 Cordless Impact Wrench

Item No.	Parts No.	Description	Interchangeability	Q'ty	New/ Old	Note1	Note2
001	422607-6	Bumper		1			
002	140U47-9	Hammer case complete		1	*		
002-1	141U35-9	Hammer case complete	<	1			
003	136296-8	Internal gear case assembly		1			
003		INC. 20,21					
004	253481-9	Flat washer 20		1			
006	231907-1	Ring spring 10		1			
007	136256-0	Anvil assembly		1			
007		INC. 6					
008	327624-0	Hammer		1			
009	216001-0	Steel ball 3.5		33			
010	267340-1	Flat washer 32		1			
011	232629-6	Compression spring 34		1			
012	216007-8	Steel ball 6.4		2			
013	227813-6	Spur gear 21		3			
014	327623-2	Spindle		1			
015	256211-7	Pin 6		3			
016	267494-4	Flat washer 25		1	*		
016-1	267127-1	Flat washer 26	O	1			
017	347722-4	Retainer		1			
018	227814-4	Internal spur gear 48		1			
019	213624-5	O-ring 48		1	*		
020	213654-6	O-ring 60		1			
021	213961-7	O-ring 22		1			
022	210069-8	Ball bearing 6900DDW		1			
023	519635-1	Rotor assembly		1			
023		INC. 22,24					
024	211343-7	Ball bearing 688ZZ		1			
025	629A06-1	Stator complete		1			
026	857M03-1	Name plate DTW700		1			
027	251476-6	Hex. socket head bolt M5X35 WR		4	*		
027-1	265D13-4	Hex. socket head bolt M5X35 WRM	<	4	*		
027-2	265E44-9	Hex. socket head bolt M5X35 WRM	<	4			
028	183P88-2	Housing set		1			
028		INC. 36					
029	266326-2	Binding head tapping screw 4X18		7			
030	266326-2	Binding head tapping screw 4X18		4			
031	412673-1	Rear cover		1			
032	620549-0	LED circuit		1	*		
032-1	620V45-0	LED CIRCUIT	<	1			
033	456268-0	F/R change lever		1			
034	140U03-9	Switch complete		1			
C10	424774-3	Switch cover		1			
035	140U53-4	Switch plate complete		1	*		
C10	8012S9-8	Switch label		1	*		

035-1	1413B3-8	Switch plate complete	O	1			
C10	8012S9-8	Switch label		1			
036	183P88-2	Housing set		1			
036		INC. 28					
037	424773-5	Cushion rubber		1	*		
037-1	422A56-3	Cushion rubber	<	1			
038	424773-5	Cushion rubber		1	*		
038-1	422A56-3	Cushion rubber	<	1			
039	268284-8	Pin 1.5		1			
040	183P89-0	Battery housing set		1			
C10	263005-3	Rubber pin 6		2			
C20	252126-6	Hex. lock nut M4-7		2			
040		INC. 44					
041	263036-2	Rubber pin 5		1			
042	643874-2	Terminal		1			
043	424517-3	Cushion		1			
044	183P89-0	Battery housing set		1			
C10	263005-3	Rubber pin 6		2			
C20	252126-6	Hex. lock nut M4-7		2			
044		INC. 40					
045	857M11-2	Serial No. label DTW700		1			
A01	251314-2	Truss head screw M4X12		1			
A02	347723-2	Hook		1			
F01	191G67-2	Extension handle set		1			