Model No.DRC300 Robotic Cleaner

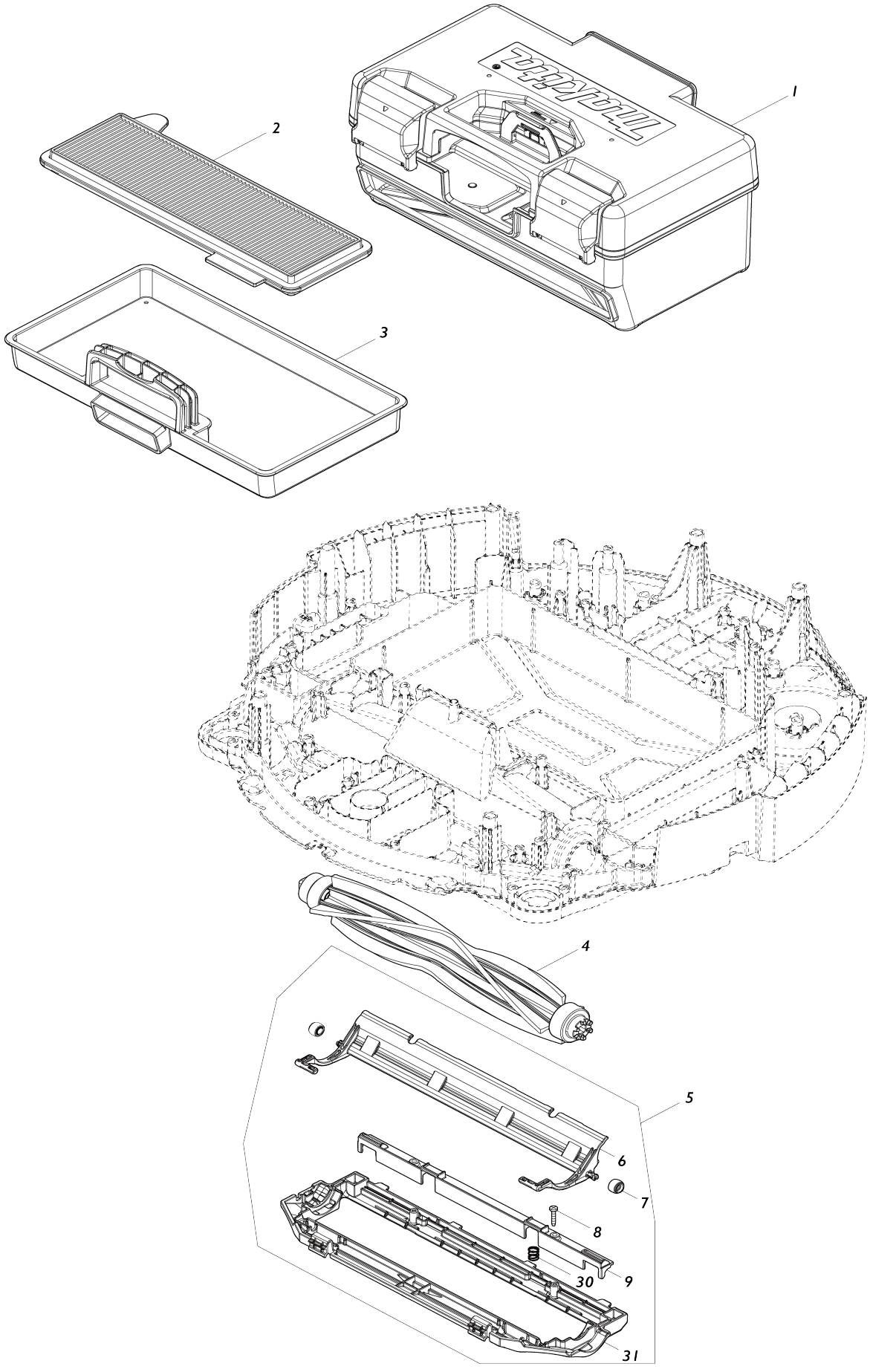

Model No.DRC300 Robotic Cleaner

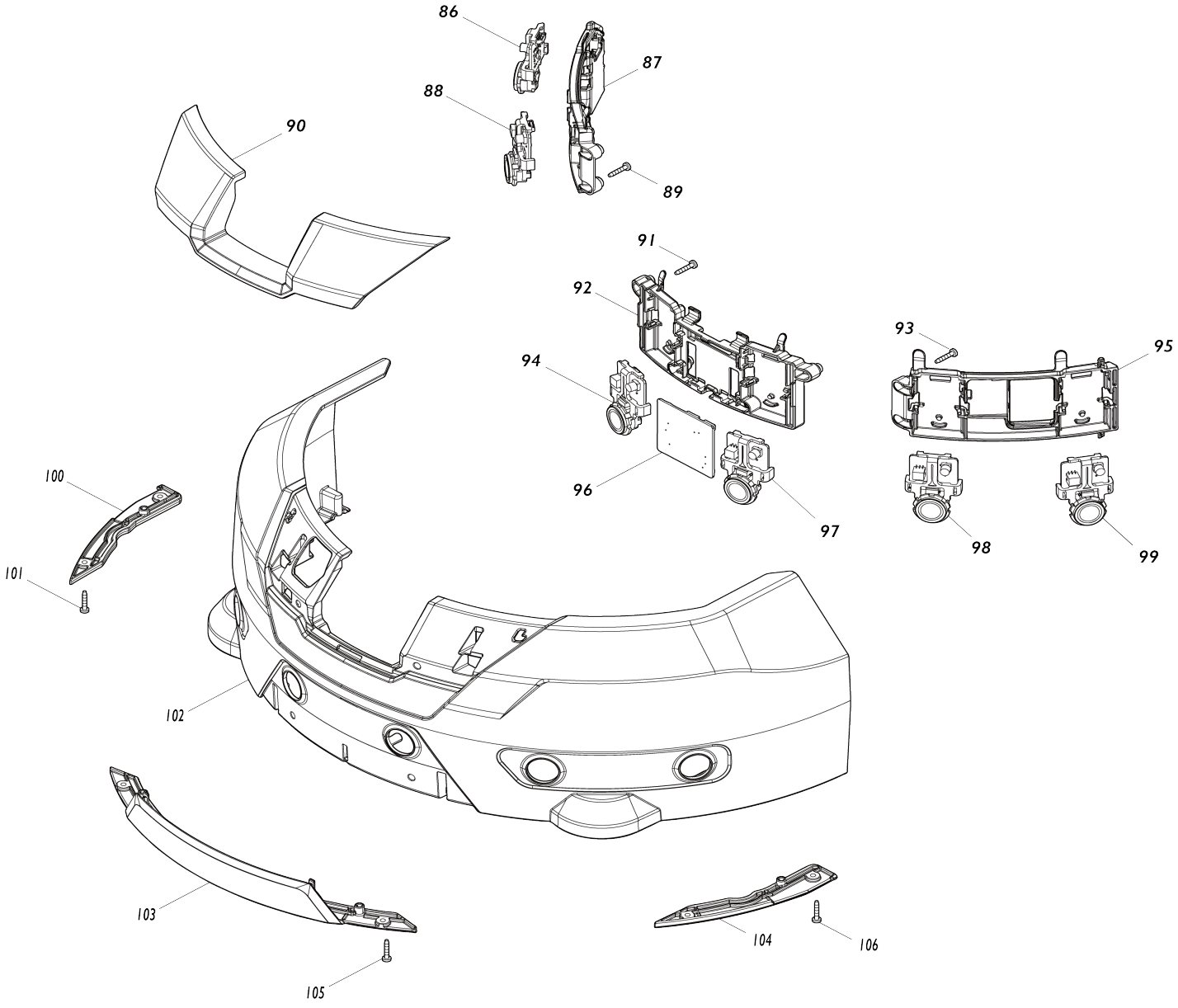

Model No.DRC300 Robotic Cleaner

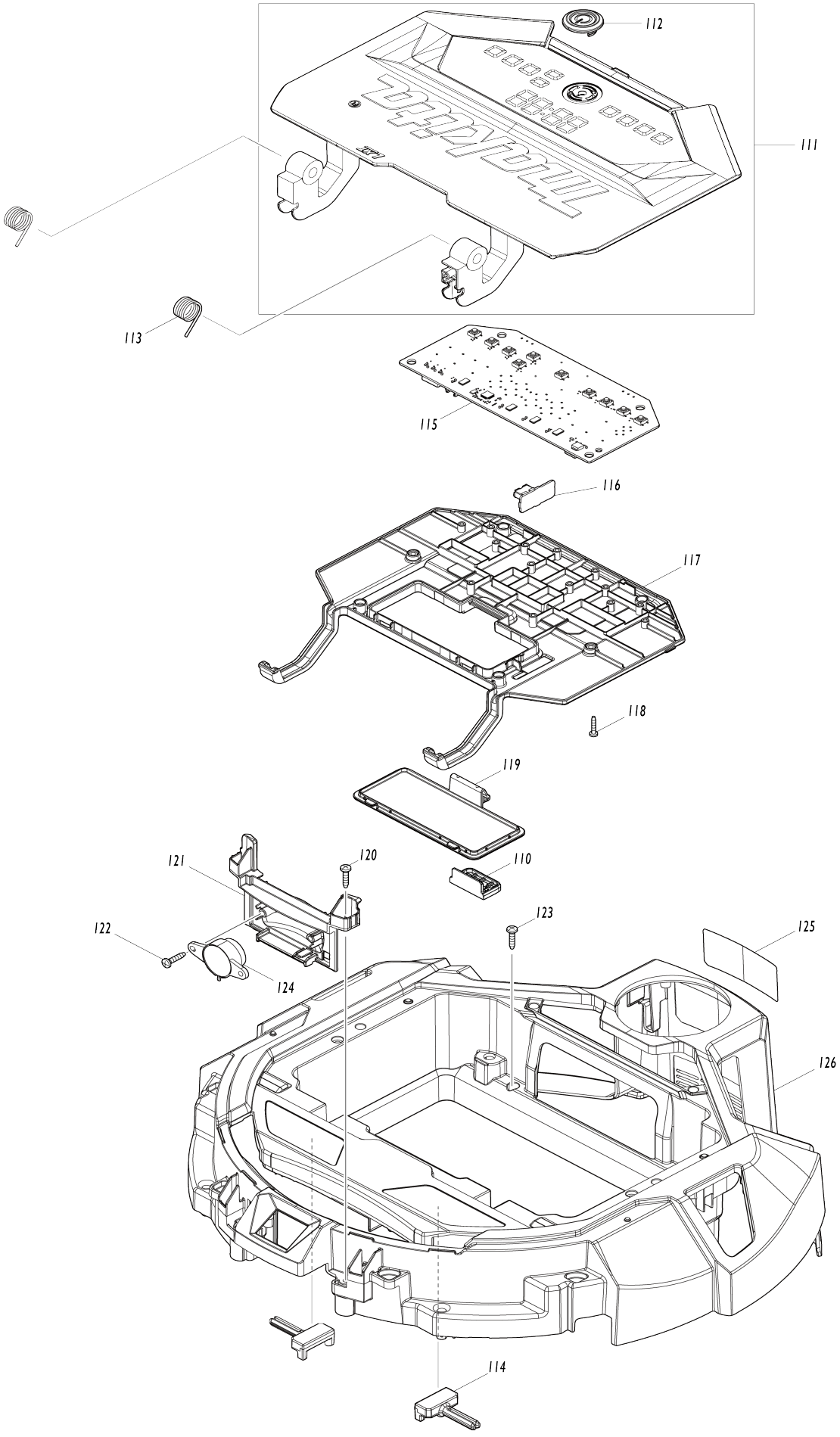

Model No.DRC300 Robotic Cleaner

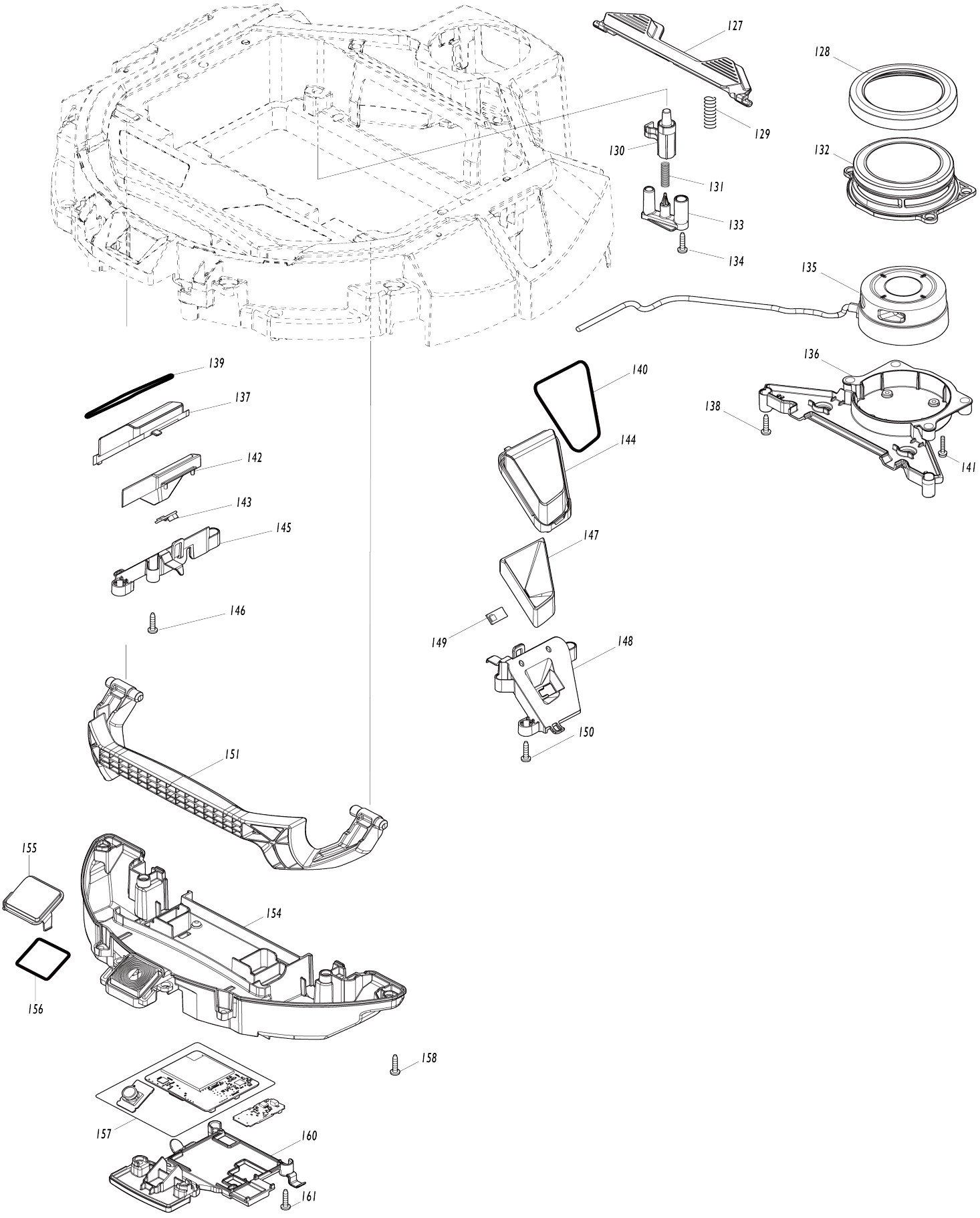

Model No.DRC300 Robotic Cleaner

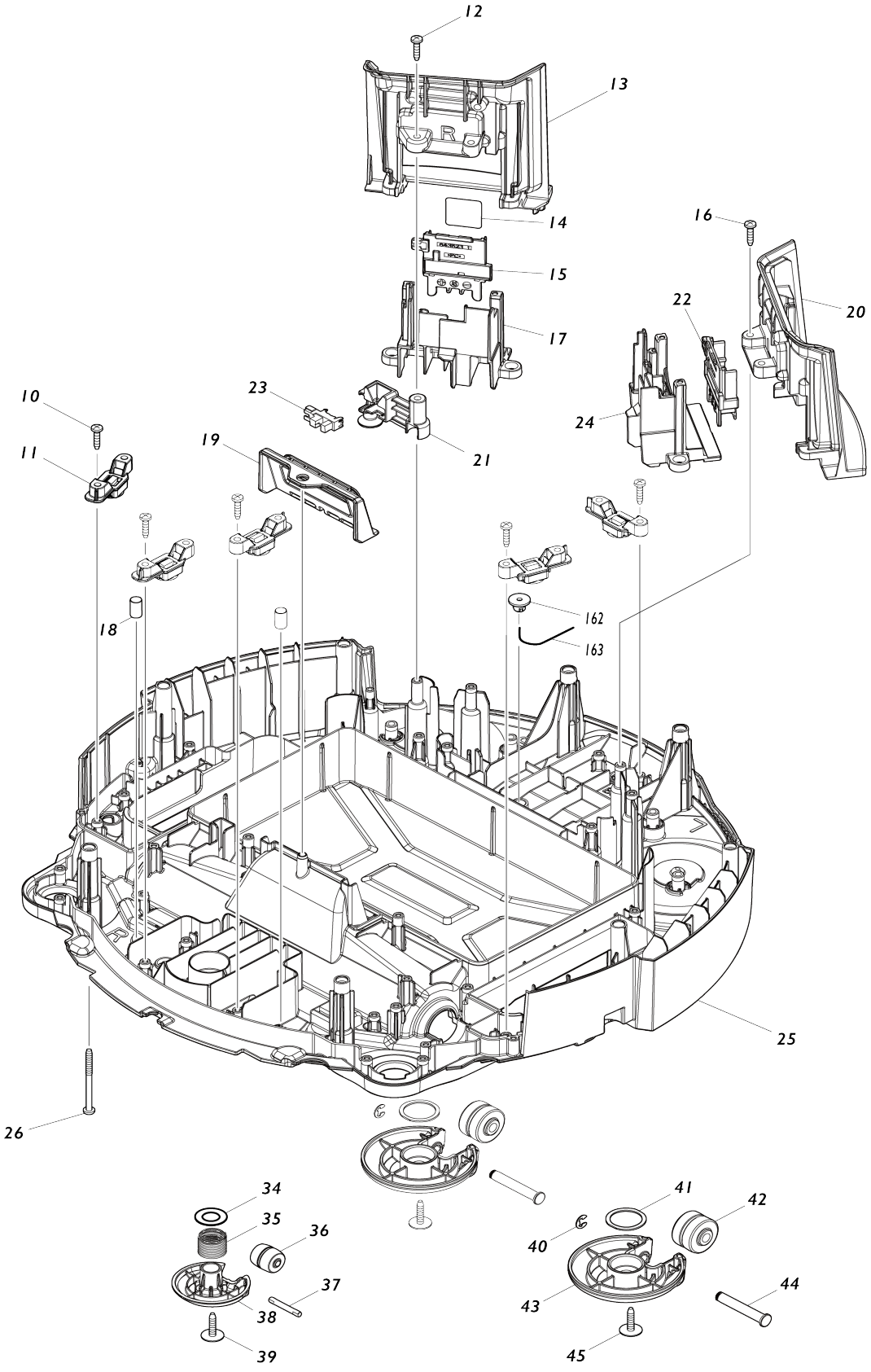

Model No.DRC300 Robotic Cleaner

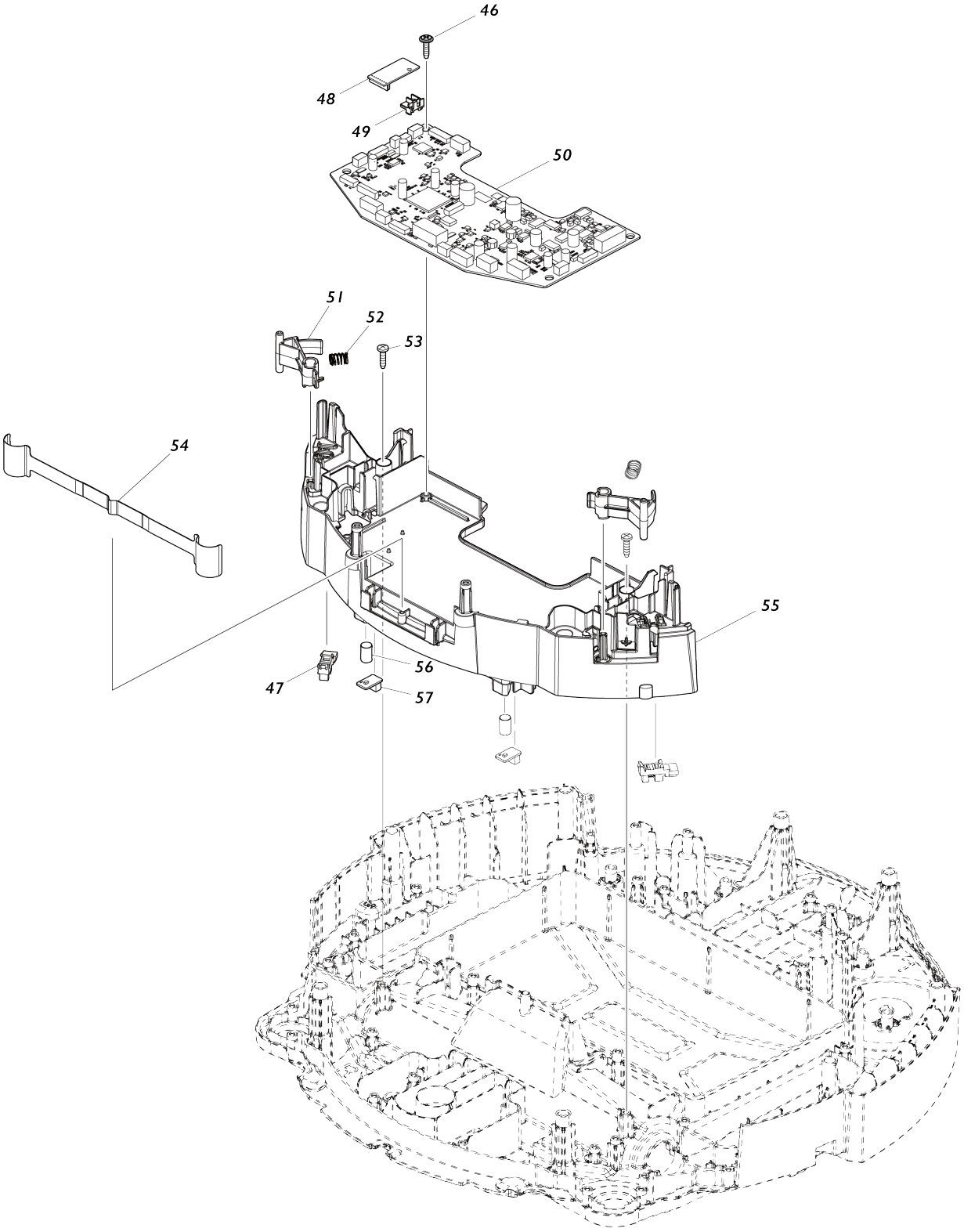

Model No.DRC300 Robotic Cleaner

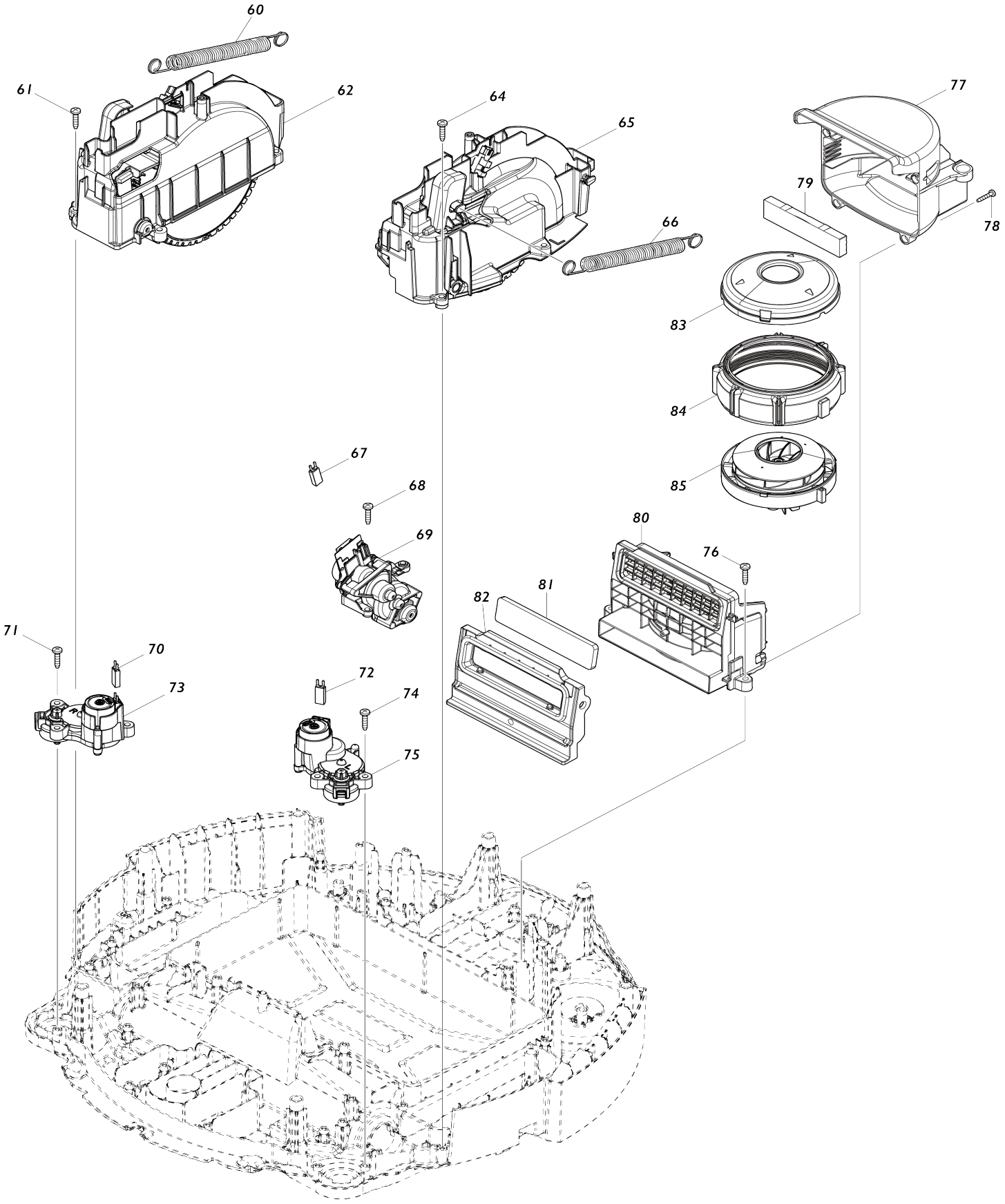

Model No.DRC300 Robotic Cleaner

Item No.	Parts No.	Description	Interchangeability	Q'ty	New/ Old	Note1	Note2
001	141A46-4	Dust box complete		1			
C10	422690-3	Seal ring		1			
002	191P31-7	Filter H complete set		1			
003	413500-5	Upper tank		1			
004	191P22-8	Main brush complete set		1			
C10	413581-9	Metal holder		1			
005	191P24-4	Bottom plate assembly set		1			
005		INC. 6-9,30,31					
006	136530-6	Brush C assembly		1			
007	413585-1	Bottom roller 11		2			
008	266429-2	Binding head tapping screw 3X16		2			
009	413586-9	Bottom cap		1			
010	266326-2	Binding head tapping screw 4X18		10			
011	1910L6-4	Cliff sensor assembly repair set		5	*		
011-1	192A40-9	CLIFF SENSOR ASSY REPAIR SET	<	5			
012	266326-2	Binding head tapping screw 4X18		2			
013	141B82-6	Terminal cover R complete		1			
C10	263005-3	Rubber pin 6		2			
014	811U06-7	Serial No. label DRC300		1			
015	643523-1	Terminal		1	*		
015-1	654950-7	Terminal	X	1			
016	266326-2	Binding head tapping screw 4X18		2			
017	413478-2	Terminal base		1			
018	688234-1	Ferrite core		2			
019	413554-2	Packing A		1			
020	141B81-8	Terminal cover L complete		1			
C10	263005-3	Rubber pin 6		2			
021	413555-0	Filter sensor holder		1			
022	643523-1	Terminal		1	*		
022-1	654950-7	Terminal	X	1			
023	1910J8-6	Photo interrupter repair set		1			
024	413478-2	Terminal base		1			
025	141J98-9	Lower housing complete		1	*		
C10	422530-5	Sponge sheet		2	*		
025-1	141J98-9	Lower housing complete	O	1			
C10	422530-5	Sponge sheet		2			
026	266147-2	Binding head tapping screw 4X55		8			
030	232690-3	Compression spring 7		2			
031	413583-5	Bottom plate		1			
034	253084-9	Flat washer 12		1			
035	232685-6	Compression spring 18		1			
036	413552-6	Front roller 18		1			
037	256989-2	Pin 4		1			
038	413553-4	Front caster		1			

039	251599-0	Binding head tapping screw 4X18		1			
040	961018-5	Stop ring (EXT) E-5		2			
041	261167-1	Polyacetal washer 22		2			
042	413551-8	Rear roller 28		2			
043	413550-0	Rear caster		2			
044	256988-4	Collar HD. pin 7		2			
045	251599-0	Binding head tapping screw 4X18		2			
046	263046-9	Tapping screw 3X14		4			
047	1910J8-6	Photo interrupter repair set		2			
048	1910J9-4	RF module repair set		1			
049	413561-5	RF holder		1			
050	1910K0-9	Control board repair set		1	*		
050-1	1910K0-9	Control board repair set	O	1			
051	413560-7	Bumper arm		2			
052	232700-6	Compression spring 8		2			
053	266326-2	Binding head tapping screw 4X18		2			
054	232687-2	Leaf spring		1			
055	413418-0	Controller holder		1			
056	688234-1	Ferrite core		2			
057	1910K1-7	Hall sensor board repair set		2			
060	232686-4	Tension spring 11		1			
061	266326-2	Binding head tapping screw 4X18		4			
062	1910L3-0	Wheel R assembly repair set		1			
C10	638A06-0	Lead unit G		1			
064	266326-2	Binding head tapping screw 4X18		4			
065	1910L2-2	Wheel L assembly repair set		1			
C10	638A06-0	Lead unit G		1			
066	232686-4	Tension spring 11		1			
067	632S56-5	Thermal protector unit		1			
068	266326-2	Binding head tapping screw 4X18		2			
069	1910L1-4	Main brush motor assembly repair set		1			
C10	413536-4	Joint		1			
C20	911029-0	Pan head screw M3X16 WG		1			
070	632S55-7	Thermal protector unit		1			
071	266326-2	Binding head tapping screw 4X18		3			
072	632S55-7	Thermal protector unit		1			
073	1910L5-6	Side brush R motor repair set		1			
074	266326-2	Binding head tapping screw 4X18		3			
075	1910L4-8	Side brush L motor repair set		1			
076	266326-2	Binding head tapping screw 4X18		2			
077	413559-2	Air duct cover		1			
078	266429-2	Binding head tapping screw 3X16		4	*		
078-1	266130-9	Binding head tapping screw 3X16	O	4			

079	422698-7	Exhaust filter		1			
080	413557-6	Air duct housing		1			
081	422697-9	Sponge sheet 24-110		1			
082	413558-4	Packing B		1			
083	413535-6	Fan cover		1			
084	422696-1	Rubber ring		1			
085	1910L0-6	Fan motor assembly repair set		1			
086	1910K3-3	USS sub board repair set		1			
087	413482-1	USS cover R		1			
088	1910K3-3	USS sub board repair set		1			
089	266429-2	Binding head tapping screw 3X16		2	*		
089-1	266130-9	Binding head tapping screw 3X16	O	2			
090	413572-0	Bumper cap		1			
091	266429-2	Binding head tapping screw 3X16		4	*		
091-1	266130-9	Binding head tapping screw 3X16	O	4			
092	413480-5	USS cover C		1			
093	266429-2	Binding head tapping screw 3X16		2	*		
093-1	266130-9	Binding head tapping screw 3X16	O	2			
094	1910K3-3	USS sub board repair set		1			
095	413481-3	USS cover L		1			
096	1910K2-5	USS main board repair set		1	*		
096-1	1910K2-5	USS main board repair set	O	1			
097	1910K3-3	USS sub board repair set		1			
098	1910K3-3	USS sub board repair set		1			
099	1910K3-3	USS sub board repair set		1			
100	413579-6	Bumper cover R		1			
101	266429-2	Binding head tapping screw 3X16		2	*		
101-1	266130-9	Binding head tapping screw 3X16	O	2			
102	413427-9	Bumper		1			
103	413575-4	Bumper cover C		1			
104	413578-8	Bumper cover L		1			
105	266429-2	Binding head tapping screw 3X16		3	*		
105-1	266130-9	Binding head tapping screw 3X16	O	3			
106	266429-2	Binding head tapping screw 3X16		2	*		
106-1	266130-9	Binding head tapping screw 3X16	O	2			
110	422820-6	Rubber cap		1			
111	127838-9	Top cover assembly		1			
111		INC. 112					
112	413570-4	Switch button		1			
113	232689-8	Torsion spring 14		2			
114	312B42-7	Top cover shaft		2			
115	1910K4-1	UI board repair set		1			
116	1910K7-5	USB IF board repair set		1			

117	141B97-3	Top cap complete		1			
C10	8032K4-8	Indication label		1			
118	266429-2	Binding head tapping screw 3X16		6	*		
118-1	266130-9	Binding head tapping screw 3X16	O	6			
119	413543-7	USB cover		1			
120	266326-2	Binding head tapping screw 4X18		2			
121	413537-2	Inner front cover		1			
122	266326-2	Binding head tapping screw 4X18		2			
123	266326-2	Binding head tapping screw 4X18		6			
124	1910K9-1	Buzzer repair set		1			
125	811U01-7	Name plate DRC300		1			
126	141B86-8	Upper housing complete		1			
C10	263005-3	Rubber pin 6		2			
C20	8032J5-9	Caution label		1			
C30	8032J6-7	Caution label		1			
127	413568-1	Button		1	*		
127-1	413P98-8	Button	<	1			
128	422701-4	Protector		1			
129	231297-2	Compression spring 9		2			
130	413540-3	Filter button		1			
131	232688-0	Compression spring 6		1			
132	141B90-7	Lidar cover complete		1			
C10	8032J8-3	Indication label		1			
133	413541-1	Spring holder		1			
134	266326-2	Binding head tapping screw 4X18		1			
135	620B66-2	Lidar module		1	*		
135-1	620B66-2	Lidar module	O	1	*		
135-2	620U06-4	LIDAR MODULE	<	1			
136	413567-3	Lidar holder		1			
137	413547-9	LED lens R		1			
138	266326-2	Binding head tapping screw 4X18		6			
139	422703-0	Seal ring S		1			
140	422703-0	Seal ring S		1			
141	911029-0	Pan head screw M3X16 WG		4			
142	413548-7	LED reflector R		1			
143	1910K5-9	LED board repair set		1			
144	413544-5	LED lens L		1			
145	413549-5	LED cover R		1			
146	266326-2	Binding head tapping screw 4X18		2			
147	413545-3	LED reflector L		1			
148	413546-1	LED cover L		1			
149	1910K5-9	LED board repair set		1			
150	266326-2	Binding head tapping screw 4X18		2			
151	413562-3	Handle		1	*		
151-1	4130S7-4	Handle	<	1			

154	413422-9	Handle cover		1			
155	413542-9	Vision camera lens		1			
156	422700-6	Seal ring T		1			
157	1910K8-3	Vision camera complete repair s et		1	*		
157-1	1910K8-3	Vision camera complete repair s et		1	*		
157-2	1911A5-5	Vision camera complete repair s et		1	*		
157-3	1911A5-5	Vision camera complete repair s et	O	1	*		
157-4	1911A5-5	Vision camera complete repair s et	O	1	*		
157-5	1911A5-5	Vision camera complete repair s et	O	1			
158	266326-2	Binding head tapping screw 4X1 8		6			
160	413565-7	Handle lower cover		1			
161	266326-2	Binding head tapping screw 4X1 8		4			
162	421468-1	Cord seal		1			
163	649152-8	Earth line 70		1			
A01	191P28-6	Side brush assembly set		1			
A02	620H54-5	RF remote controller		1			
C10	NC00000012	BATTERY COVER		1			
E01	136571-2	Earth line lead unit A assembly		1			
E01		INC. 162,163					
E02	638A01-0	Lead unit B		1			
E03	638A02-8	Lead unit C		1			
E04	638A03-6	Lead unit D		2			
E05	638A04-4	Lead unit E		1			
E06	638A05-2	Lead unit F		2			
E08	638A07-8	Lead unit H		1			
E09	638A08-6	Lead unit I		1			
E10	638A09-4	Lead unit J		2			
E11	638A10-9	Lead unit K		1			
E12	638A11-7	Lead unit L		1			
E13	638A12-5	Lead unit M		1			
E14	638A13-3	Lead unit N		1			
E15	638A14-1	Lead unit O		1			
F01	191P18-9	Magnet tape set		1			
F02	191P20-2	Main brush complete set		1			
C10	413581-9	Metal holder		1			
F03	191P22-8	Main brush complete set		1			
C10	413581-9	Metal holder		1			
F04	191P24-4	Bottom plate assembly set		1			
F05	191P26-0	Side brush assembly set		1			
F06	191P28-6	Side brush assembly set		1			
F07	191P31-7	Filter H complete set		1			
F08	191X35-7	Sponge sheet set		1			