Model No.DCF300 CORDLESS FAN

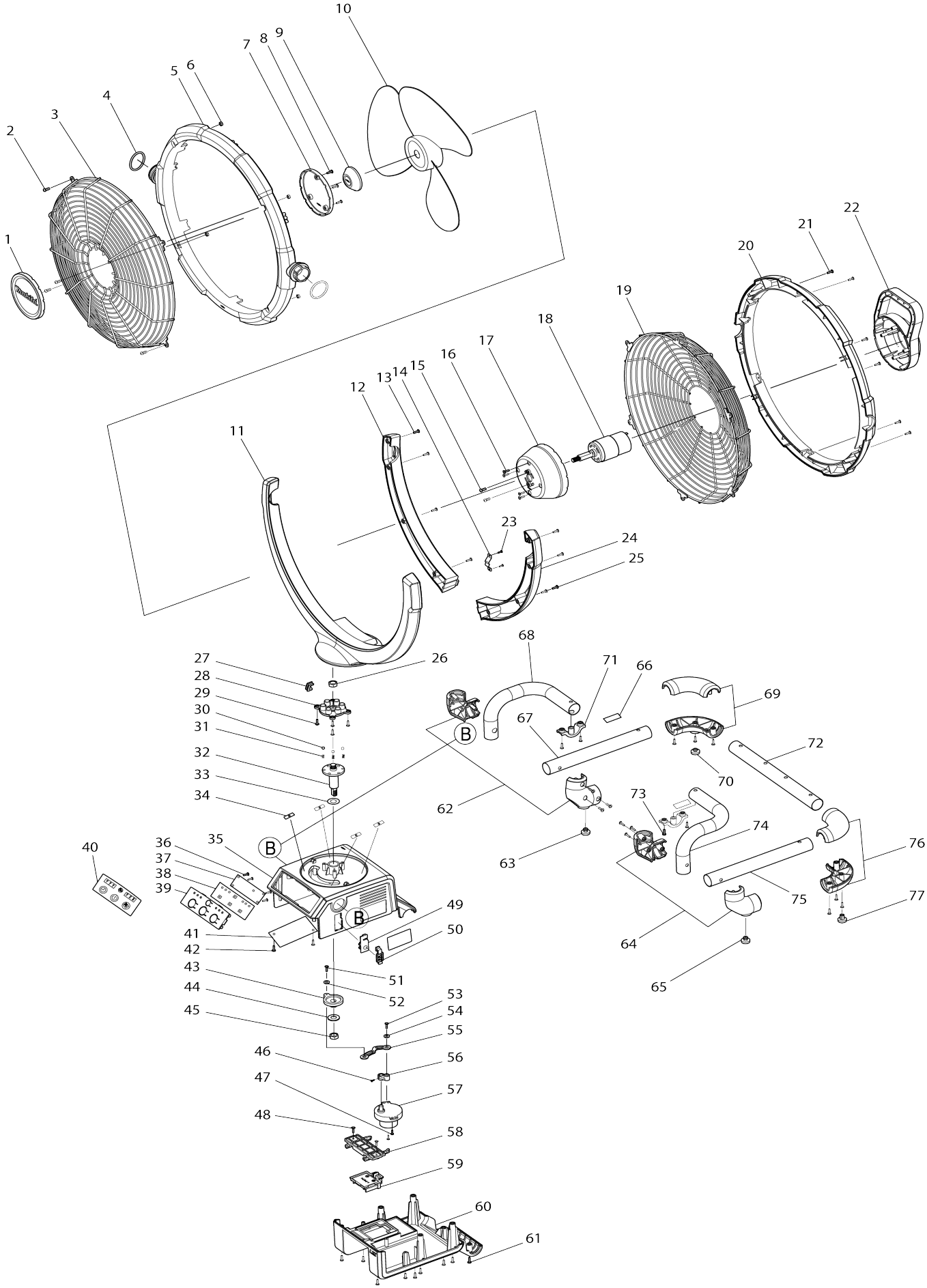

Model No.DCF300 CORDLESS FAN

Item No.	Parts No.	Description	Interchangeability	Q'ty	New/ Old	Note1	Note2
001	TE00000046	LOGO FRONT PLATE		1			
002	TE00000101	PHILLIPS HEAD SCREW M4X10		4			
003	TE00000047	FRONT GUARD		1			
004	TE00000048	O-RING 32		2			
005	TE00000049	FRONT FRAME		1			
006	TE00000092	NUT M4		4			
007	TE00000050	LOGO REAR PLATE		1			
008	TE00000104	SCREW B 3X10		3			
009	TE00000051	FAN BLADE LOCK		1			
010	TE00000052	FAN BLADE		1	*		
010-1	TE00000701	FAN BLADE	O	1			
011	TE00000053	FRONT ARM		1			
012	TE00000054	REAR ARM R		1			
013	TE00000103	SCREW A 3X14		4			
014	TE00000055	LEAF SPRING		1			
015	TE00000101	PHILLIPS HEAD SCREW M4X10		2			
016	TE00000103	SCREW A 3X14		4			
017	TE00000056	MOTOR FRONT COVER		1			
018	TE00000057	MOTOR		1	*		
018-1	TE00000509	MOTOR ASSY	<	1			
D10		INC. 79					
019	TE00000058	REAR GUARD		1			
020	TE00000059	REAR FRAME		1			
021	TE00000103	SCREW A 3X14		6			
022	TE00000060	MOTOR REAR COVER		1			
023	TE00000104	SCREW B 3X10		2			
024	TE00000100	REAR ARM L		1			
025	TE00000103	SCREW A 3X14		4			
026	TE00000069	LOCKNUT M10		1			
027	TE00000061	WIRE PROTECTOR		1			
028	TE00000062	COUPLING		1			
029	TE00000103	SCREW A 3X14		4			
030	TE00000063	STEEL BALL 6		3			
031	TE00000064	COMPRESSION SPRING-5		3			
032	TE00000065	SPINDLE		1			
033	TE00000090	POM FLAT WASHER 16		1			
034	TE00000089	POM PLATE		4	*		
034-1	TE00000474	POM PLATE	O	4			
035	TE00000066	UPPER BASE		1			
036	TE00000104	SCREW B 3X10		4			
037	TE00000088	SEAT		1			
038	TE00000154	SWITCH PCB BOARD		1	*		
038-1	TE00000479	SWITCH PCB BOARD	O	1			
039	TE00000067	SWITCH PANEL		1			
040	TE00000093	LABEL		1			
041	TE00000086	PCB		1	*		
041-1	TE00000475	PCB	O	1			

042	TE00000103	SCREW A 3X14		2			
043	TE00000068	FLANGE		1			
044	TE00000091	FLAT WASHER 10		1			
045	TE00000069	LOCKNUT M10		1			
046	TE00000102	PHILLIPS HEAD SCREW M3X14		1			
047	TE00000105	SCREW C 3X14		2			
048	TE00000103	SCREW A 3X14		2			
049	TE00000070	ADAPTOR PLATE		1			
050	TE00000071	ROBBER CAP		1			
051	TE00000104	SCREW B 3X10		1			
052	TE00000087	FLAT WASHER 3		1			
053	TE00000104	SCREW B 3X10		1			
054	TE00000087	FLAT WASHER 3		1			
055	TE00000072	LINK A		1			
056	TE00000073	LINK B		1			
057	TE00000155	SUB MOTOR		1			
058	TE00000075	TERMINAL HOLDER		1			
059	TE00000076	TERMINAL +WIRE		1	*		
059-1	TE00000315	TERMINAL WITH WIRE	O	1			
060	TE00000077	LOWER BOSE		1			
061	TE00000103	SCREW A 3X14		9			
062	TE00000079	FRONT JOINT L		1			
063	TE00000084	FOOT B		1			
064	TE00000078	FRONT JOINT R		1			
065	TE00000084	FOOT B		1			
066	TE00000097	RUBBER SEAL		8			
067	TE00000094	SIDE STEEL PIPE		1			
068	TE00000095	STEEL PIPE R		1			
069	TE00000082	REAR JOINT		1			
070	TE00000083	FOOT A		1			
071	TE00000080	PIPE HOLDER		2			
072	TE00000081	REAR STEEL PIPE		1			
073	TE00000103	SCREW A 3X14		16			
074	TE00000096	STEEL PIPE L		1			
075	TE00000094	SIDE STEEL PIPE		1			
076	TE00000082	REAR JOINT		1			
077	TE00000083	FOOT A		1			
078	TE00000323	NUT M3		1			
079	TE00000507	MOTOR CONNECTION WIRE		1			
A01	TE00000112	ADAPTER		1	*		
A01-1	TE00000174	AC ADAPTOR	O	1	*		
A01-2	TE00000442	AC ADAPTER	O	1			

Please state Parts No. when your order.

Print Date 05/29/2024