Model No.BO4901 FINISHING SANDER

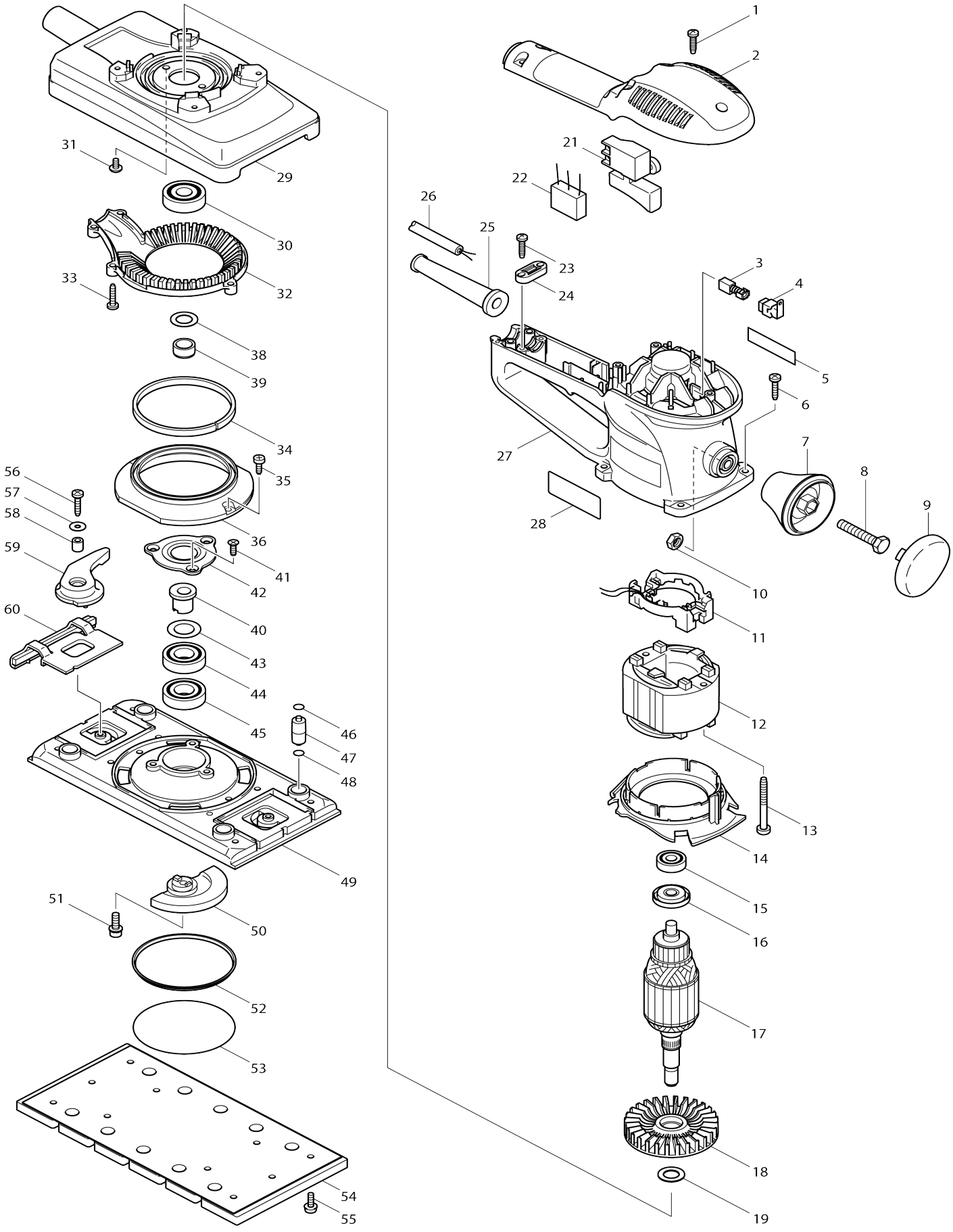

Model No.BO4901 FINISHING SANDER

Item No.	Parts No.	Description	Interchangeability	Q'ty	New/ Old	Note1	Note2
001	265995-6	TAPPING SCREW 4X18		5			
002	417779-0	TOP COVER		1			
003	191962-4	CARBON BRUSH CB-419		1	*		
003-1	195015-1	CARBON BRUSH SET CB-419	O	1			
004	643923-5	BRUSH HOLDER		2			
005	819063-3	MAKITA LABEL		1			
006	266042-6	TAPPING SCREW BIND CT 4X20		4			
007	417774-0	KNOB		1			
008	921467-8	HEX. BOLT M8X45		1			
009	417775-8	KNOB COVER		1			
010	931403-6	HEX. NUT M8		1			
011	638135-3	SUPPORT COMPLETE		1	*		
011-1	632R03-0	SUPPORT COMPLETE	<	1			
012	634464-2	FIELD 230-240V		1			
013	266046-8	TAPPING SCREW 5X50		2			
014	417777-4	BAFFLE PLATE		1			
015	210005-4	BALL BEARING 608DDW		1			
016	681644-1	INSULATION WASHER		1			
017	513504-8	ARMATURE ASS'Y 230-240V		1			
D10		INC. 15,16,18					
018	240043-2	FAN 70		1			
019	253744-3	FLAT WASHER 12		1			
021	651286-5	SWITCH SGEL206C-5		1	*		
021-1	651286-5	SWITCH SGEL206C-5	O	1			
022	645253-0	NOISE SUPPRESSOR		1	*		
022-1	645200-1	NOISE SUPPRESSOR	S	1			
023	265995-6	TAPPING SCREW 4X18		2			
024	687052-4	STRAIN RELIEF		1			
025	682516-3	CORD GUARD 9.3-85		1	*		
025-1	682504-0	CORD GUARD 10-85	O	1			
026	665890-4	POWER SUPPLY CORD 1.0-2-4.0		1			
027	183419-9	MOTOR HOUSING		1			
D10		INC. 5					
028	853507-3	NAME PLATE BO4901		1			
029	317538-1	FRAME		1			
030	211129-9	BALL BEARING 6201DDW		1			
031	251291-8	+ SCREW M4X8		2			
032	417782-1	SCROLL COVER		1			
033	266042-6	TAPPING SCREW BIND CT 4X20		5			
034	443108-1	FELT 6X225X3		1			
035	266026-4	TAPPING SCREW BIND CT 4X12		2			
036	417772-4	DUST GUIDE		1			
038	267212-0	FLAT WASHER 12		1			
039	214109-4	PLANE BEARING 12		1			
040	313104-2	SLEEVE		1			
041	266058-1	TAPPING SCREW CT 4X12		3			
042	162171-2	BEARING RETAINER 24		1			

043	253315-6	THIN WASHER 15		1			
044	211201-7	BALL BEARING 6002LLB		1			
045	211201-7	BALL BEARING 6002LLB		1			
046	213047-7	O RING 4		4			
047	317535-7	FOOT		4			
048	213047-7	O RING 4		4			
049	317537-3	BASE		1			
050	317536-5	BALANCER		1			
051	266071-9	HEX. SOCKET HEAD BOLT M5X16		1			
052	345211-3	UNDER COVER		1			
053	213755-0	O RING 75		1			
054	193523-6	PAD		1			
055	911118-1	PAN HEAD SCREW M4X12		8			
056	266042-6	TAPPING SCREW BIND CT 4X20		2			
057	253874-0	FLAT WASHER 4		2			
058	257659-6	SLEEVE 4		2			
059	153361-8	CLAMP LEVER COMPLETE		2			
060	153362-6	PAPER CLAMP COMPLETE		2			
C10	421498-2	CLAMP RUBBER		2			
A01	A-14093	ABRASIVE PAPER 115-120 /STD		1			
F01	192349-3	JOINT 25		1			
A02	821550-0	CONNECTOR PLASTIC CASE (TYP E2)		1			
C10	453974-8	LATCH		4			
A03	837675-0	INNER TRAY		1			
A04	803T84-5	BO4901J INDICATION LABEL		1			
A05	803T85-3	BO4901J PLASTIC CASE LABEL		2			