Model No.BO4565 Finishing Sander

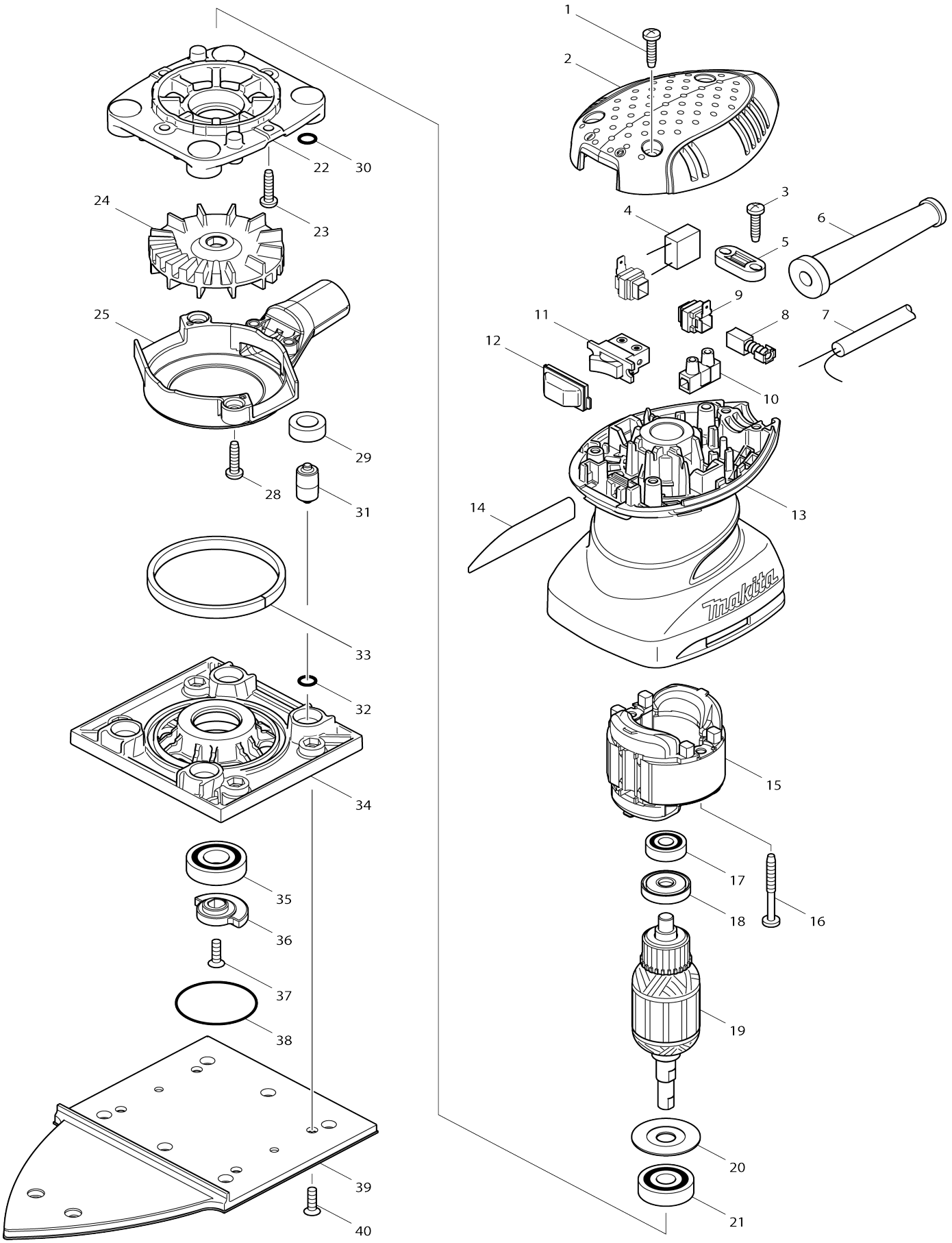

Model No.BO4565 Finishing Sander

Item No.	Parts No.	Description	Interchangeability	Q'ty	New/ Old	Note1	Note2
001	265995-6	Binding head tapping screw 4X18		3			
002	450071-1	Top cover		1			
003	265995-6	Binding head tapping screw 4X18		2			
004	645105-5	Noise suppressor		1			
005	687124-5	Strain relief		1			
006	682569-2	Cord guard 8-85		1			
007	665383-1	Power supply cord 1.0-2-2.0		1			
008	191962-4	Carbon brush set CB-419		1	*		
008-1	195015-1	Carbon brush set CB-419	O	1			
009	643995-0	Brush holder		2			
010	654532-5	Terminal block 1P		1			
011	651527-9	Switch		1			
012	424039-3	Switch cover		1			
013	450072-9	Motor housing		1			
014	863735-2	Name plate BO4565		1			
015	593649-8	Field assembly 240V		1	*		
C10	654069-2	Receptacle 41-187N		2	*		
015-1	593649-8	Field assembly 240V	O	1			
C10	654069-2	Receptacle 41-187N		2	*		
C11	654086-2	Receptacle 42486-2	O	2			
016	266048-4	Binding head tapping screw 4X40		2			
017	210034-7	Ball bearing 607LLB		1	*		
017-1	210062-2	Ball bearing 607ZZ	O	1	*		
017-2	210293-3	Ball bearing 607ZZ	O	1			
018	681652-2	Insulation washer		1			
019	515708-8	Armature assembly 220-240V		1	*		
019		INC. 17,18,20,21			*		
019-1	510558-6	Armature assembly 220-240V	O	1			
019-1		INC. 17,18,20,21					
020	267806-1	Washer 9		1			
021	211092-6	Ball bearing 629DDW		1			
022	450070-3	Bearing box		1			
023	265995-6	Binding head tapping screw 4X18		4			
024	241671-6	Fan 63		1			
025	450069-8	Fan guide		1	*		
025-1	4139E6-2	FAN GUIDE	O	1			
028	265995-6	Binding head tapping screw 4X18		2			
029	424023-8	Sponge sleeve 9		4			
030	213983-7	O-ring 4		4			
031	318151-8	Foot		4			
032	213983-7	O-ring 4		4			
033	424038-5	Sponge 6X185X3		1	*		
033-1	424684-4	Sponge 6X87X3	O	1	*		
033-2	424684-4	Sponge 6X87X3	O	1			

034	450068-0	Base		1			
035	211131-2	Ball bearing 6001DDW		1			
036	313142-4	Balancer		1			
037	912117-6	Countersunk head screw M4X12		1			
038	213510-0	O-ring 36		1			
039	158325-7	Plate complete		1			
040	912117-6	Countersunk head screw M4X12		4			
A01A	193932-9	Paper dust bag holder set		1	*		
A01-1A	135246-0	Dust box assembly	S	1			
C10	232246-2	Leaf spring		2			
C20	424144-6	Rubber sleeve		1			
C30	450769-0	Dust nozzle		1			
C40	450770-5	Dust box		1			
A01-1B	135246-0	Dust box assembly		1			
C10	232246-2	Leaf spring		2			
C20	424144-6	Rubber sleeve		1			
C30	450769-0	Dust nozzle		1			
C40	450770-5	Dust box		1			
A02A	193712-3	Paper dust bag set		1	*		
A02-1A	194746-9	Paper dust bag set	S	1			
A02-1B	194746-9	Paper dust bag set		1			
A03	192352-4	Abrasive paper set		1	*		
A03-1	D-58671	ABRASIVE SHEET PAPER 60	S	1			
A04	192655-6	Abrasive paper set		1			
A05B	821550-0	Connector plastic case (type 2)		1			
C10	453974-8	Latch		4			
A06B	838029-4	Inner tray		1			
A07B	803W28-3	Indication label BO4565J		1			
A08B	803W29-1	Plastic case label BO4565J		2	*		
A08-1B	818F91-1	Plastic case label BO4565J	O	2			
A11	D-58693	ABRASIVE SHEET PAPER 100	S	1			
A12	D-58718	ABRASIVE SHEET PAPER 150	S	1			
F05	195134-3	Filter set		1			
F06	195133-5	Filter set		1			
F07	197467-2	Plate complete set		1			