Model No.BO3710 Finishing Sander

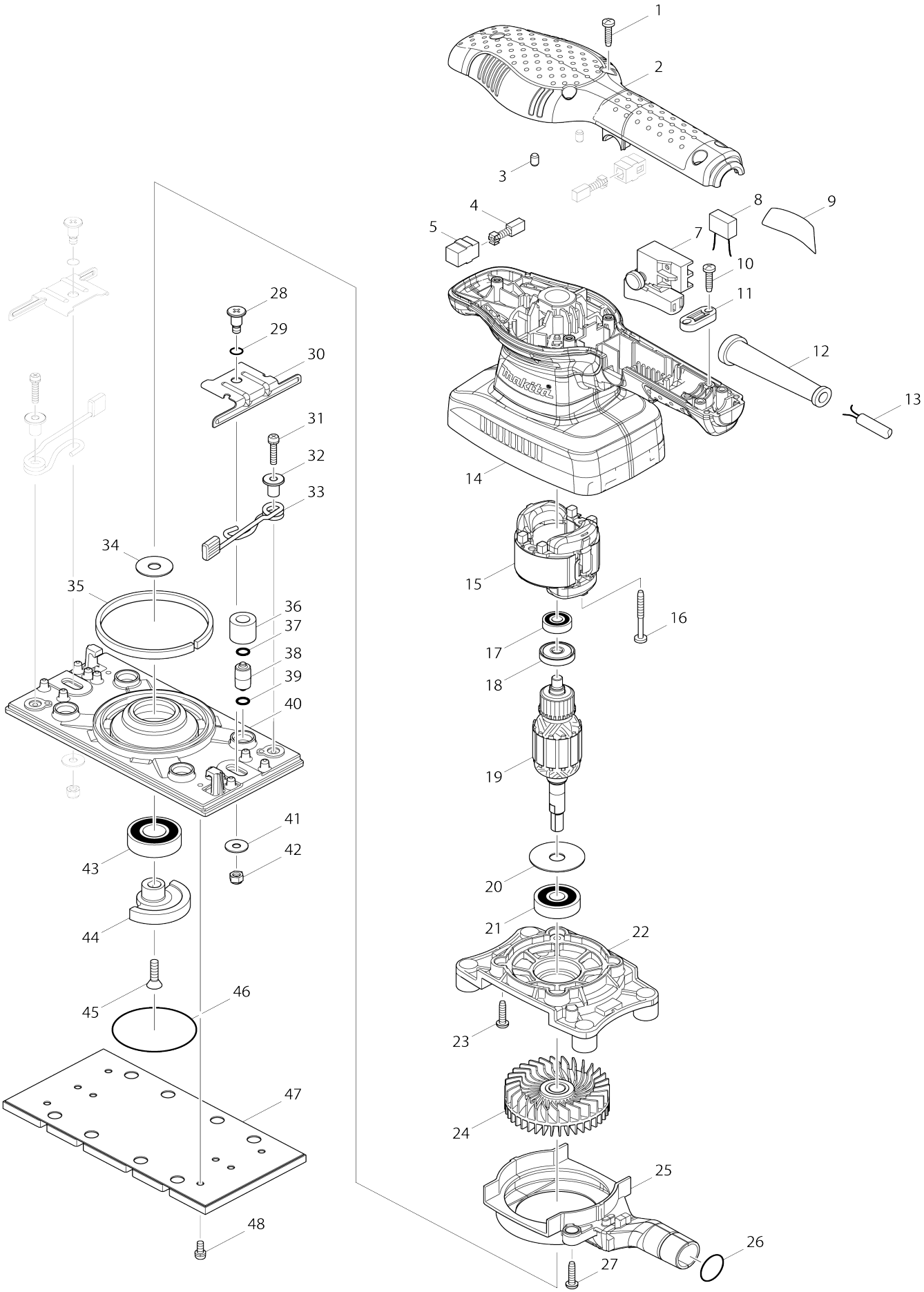

Model No.BO3710 Finishing Sander

Item No.	Parts No.	Description	Interchangeability	Q'ty	New/ Old	Note1	Note2
001	265995-6	Binding head tapping screw 4X18		5			
002	451268-5	Top cover		1			
003	263002-9	Rubber pin 4		2			
004	191627-8	Carbon brush set CB-64		1	*		
004-1	194968-1	Carbon brush set CB-64	O	1			
005	643552-4	Brush holder 5-8		2			
007	651286-5	Switch SGEL206C-5		1	*		
007-1	651286-5	Switch SGEL206C-5	O	1			
008	645239-4	Noise suppressor		1			
009	866995-5	Name plate BO3710		1			
010	265995-6	Binding head tapping screw 4X18		2			
011	687124-5	Strain relief		1			
012	682569-2	Cord guard 8-85		1			
013	665383-1	Power supply cord 1.0-2-2.0		1			
014	451270-8	Motor housing		1			
015	593703-8	Field assembly 220-240V		1	*		
C10	654037-5	Insulated terminal FVWS1.25-M3		2	*		
C11	654037-5	Insulated terminal FVWS1.25-M3	O	2	*		
015-1	593703-8	Field assembly 220-240V	O	1			
C11	654037-5	Insulated terminal FVWS1.25-M3	O	2	*		
C12	654409-4	Insulated terminal VR1.25-3.5LB	O	2			
016	266048-4	Binding head tapping screw 4X40		2			
017	210062-2	Ball bearing 607ZZ		1	*		
017-1	210293-3	Ball bearing 607ZZ	O	1			
018	681652-2	Insulation washer		1			
019	515784-2	Armature assembly 240V		1	*		
019		INC. 17,18,20,21			*		
019-1	510562-5	Armature assembly 240V	O	1			
019-1		INC. 17,18,20,21					
020	253180-3	Flat washer 10		1			
021	211087-9	Ball bearing 6200DDW		1			
022	451266-9	Bearing box		1			
023	265995-6	Binding head tapping screw 4X18		4			
024	240117-9	Fan 68		1			
025	451267-7	Fan guide		1			
026	213315-8	O-ring 19		1			
027	265995-6	Binding head tapping screw 4X18		2			
028	266511-7	Flat head shoulder screw M5X16		2			
029	213045-1	O-ring 6		2			
030	346102-1	Paper clamp		2			
031	911136-9	Pan head screw M4X20 W		2			
032	310300-3	Spring guide		2			
033	162279-2	Lever complete		2			
034	267353-2	Flat washer 8		1			

035	423389-3	Sponge 6X230X3		1	*		
035-1	423469-5	Sponge 6X105X3	O	1	*		
035-2	423469-5	Sponge 6X105X3	O	1			
036	424056-3	Sponge sleeve 9		4			
037	213983-7	O-ring 4		4			
038	318151-8	Foot		4			
039	213983-7	O-ring 4		4			
040	318484-1	Base		1	*		
040-1	318484-1	Base	X	1			
041	253807-5	Flat washer 5		2	*		
041-1	253572-6	Flat washer 5	<	2			
042	252103-8	Hex. lock nut M5-8		2			
043	211228-7	Ball bearing 6202DDW		1			
044	310301-1	Balancer		1			
045	912222-9	Countersunk head screw M5X16		1			
046	213656-2	O-ring 53		1			
047	140146-1	Pad complete		1	*		
047-1	140441-9	Pad complete	<	1			
048	911111-5	Pan head screw M4X10 W		4			
A01	135327-0	Dust box assembly		1			
C10	168557-8	Filter		1			
C20	232246-2	Leaf spring		2			
C30	424144-6	Rubber sleeve		1			
C40	450769-0	Dust nozzle		1			
C50	450770-5	Dust box		1			
A02	451271-6	Punch plate		1			
A03	794563-3	Abrasive paper 93-120 (10 pcs)		1	*		
A03-1	A-31267	ABRASIVE PAPER 93X228 #120	O	1			
F02	194929-1	Pad complete set		1			
F03	194930-6	Pad complete set		1			
F05	194947-9	Punch plate set		1			
F06	194948-7	Punch plate set		1			
F17	195134-3	Filter set		1			
F18	195133-5	Filter set		1			
F19	197464-8	Pad complete set		1			