Model No.BO3711 Finishing Sander

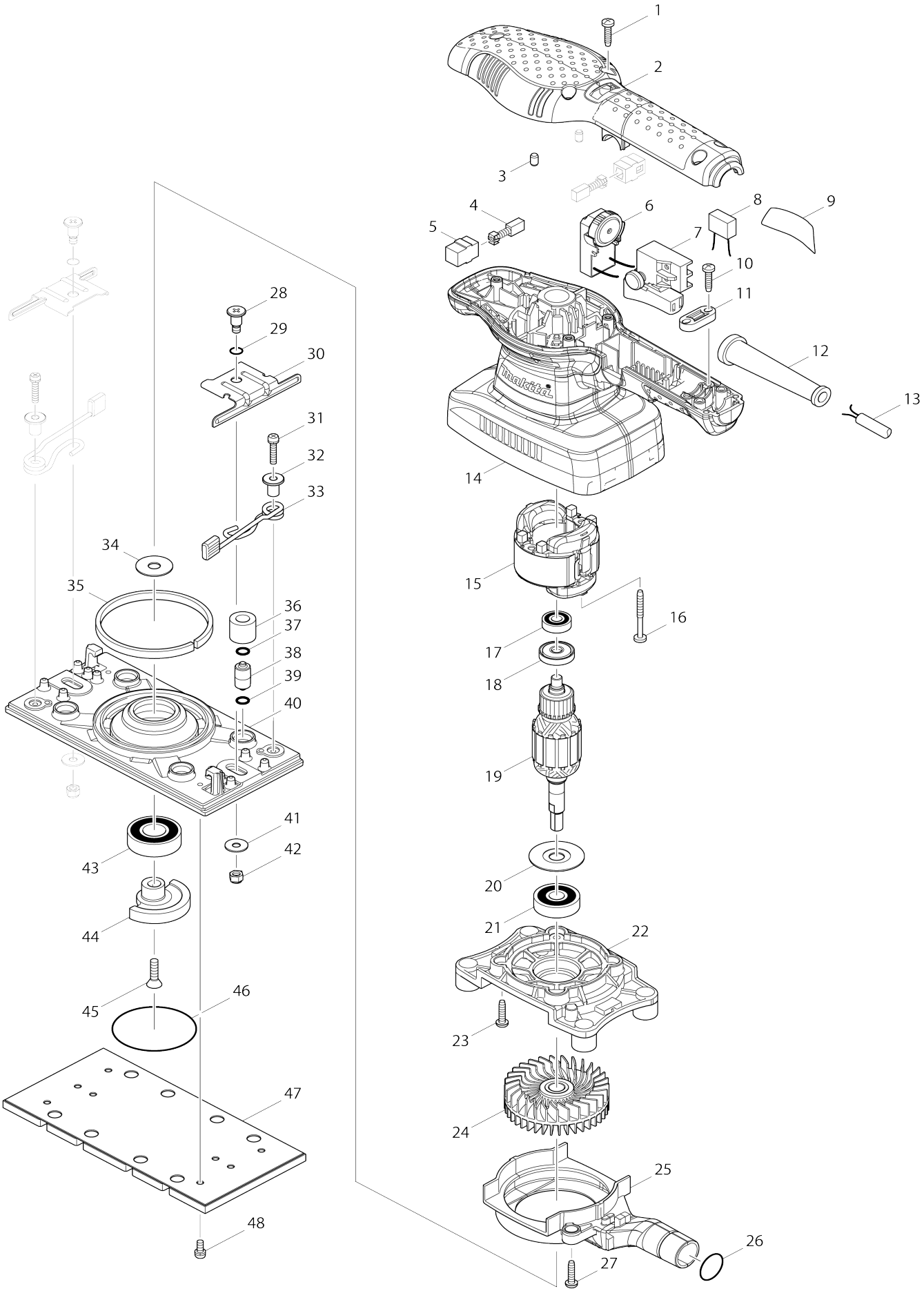

# Model No.BO3711 Finishing Sander

| Item No. | Parts No. | Description | Interchangeability | Q'ty | New/ Old | Note1 | Note2 |
|---|---|---|---|---|---|---|---|
| 001 | 265995-6 | Binding head tapping screw 4X18 | | 5 | | | |
| 002 | 451269-3 | Top cover | | 1 | | | |
| 003 | 263002-9 | Rubber pin 4 | | 2 | | | |
| 004 | 191627-8 | Carbon brush set CB-64 | | 1 | * | | |
| 004-1 | 194968-1 | Carbon brush set CB-64 | O | 1 | | | |
| 005 | 643552-4 | Brush holder 5-8 | | 2 | | | |
| 006 | 631906-7 | Controller | | 1 | | | |
| 007 | 651286-5 | Switch SGEL206C-5 | | 1 | * | | |
| 007-1 | 651286-5 | Switch SGEL206C-5 | O | 1 | | | |
| 008 | 645239-4 | Noise suppressor | | 1 | | | |
| 009 | 867006-9 | Name plate BO3711 | | 1 | | | |
| 010 | 265995-6 | Binding head tapping screw 4X18 | | 2 | | | |
| 011 | 687124-5 | Strain relief | | 1 | | | |
| 012 | 682569-2 | Cord guard 8-85 | | 1 | | | |
| 013 | 665383-1 | Power supply cord 1.0-2-2.0 | | 1 | | | |
| 014 | 451270-8 | Motor housing | | 1 | | | |
| 015 | 593708-8 | Field assembly 220-240V | | 1 | * | | |
| C11 | 654037-5 | Insulated terminal FVWS1.25-M3 | | 2 | * | | |
| 015-1 | 593708-8 | Field assembly 220-240V | O | 1 | | | |
| C11 | 654037-5 | Insulated terminal FVWS1.25-M3 | | 2 | * | | |
| C12 | 654409-4 | Insulated terminal VR1.25-3.5LB | O | 2 | | | |
| 016 | 266048-4 | Binding head tapping screw 4X40 | | 2 | | | |
| 017 | 210062-2 | Ball bearing 607ZZ | | 1 | * | | |
| 017-1 | 210293-3 | Ball bearing 607ZZ | O | 1 | | | |
| 018 | 681652-2 | Insulation washer | | 1 | | | |
| 019 | 515784-2 | Armature assembly 240V | | 1 | * | | |
| 019 | | INC. 17,18,20,21 | | | * | | |
| 019-1 | 510562-5 | Armature assembly 240V | O | 1 | | | |
| 019-1 | | INC. 17,18,20,21 | | | | | |
| 020 | 253180-3 | Flat washer 10 | | 1 | | | |
| 021 | 211087-9 | Ball bearing 6200DDW | | 1 | | | |
| 022 | 451266-9 | Bearing box | | 1 | | | |
| 023 | 265995-6 | Binding head tapping screw 4X18 | | 4 | | | |
| 024 | 240117-9 | Fan 68 | | 1 | | | |
| 025 | 451267-7 | Fan guide | | 1 | | | |
| 026 | 213315-8 | O-ring 19 | | 1 | | | |
| 027 | 265995-6 | Binding head tapping screw 4X18 | | 2 | | | |
| 028 | 266511-7 | Flat head shoulder screw M5X16 | | 2 | | | |
| 029 | 213045-1 | O-ring 6 | | 2 | | | |
| 030 | 346102-1 | Paper clamp | | 2 | | | |
| 031 | 911136-9 | Pan head screw M4X20 W | | 2 | | | |
| 032 | 310300-3 | Spring guide | | 2 | | | |
| 033 | 162279-2 | Lever complete | | 2 | | | |
| 034 | 267353-2 | Flat washer 8 | | 1 | | | |

| | | | | | | | |
|---|---|---|---|---|---|---|---|
| 035A | 423389-3 | Sponge 6X230X3 | | 1 | * | | |
| 035-1 A | 423469-5 | Sponge 6X105X3 | O | 1 | * | | |
| 035-1 B | 423469-5 | Sponge 6X105X3 | | 1 | * | | |
| 035-2 | 423469-5 | Sponge 6X105X3 | O | 1 | | | |
| 036 | 424056-3 | Sponge sleeve 9 | | 4 | | | |
| 037 | 213983-7 | O-ring 4 | | 4 | | | |
| 038 | 318151-8 | Foot | | 4 | | | |
| 039 | 213983-7 | O-ring 4 | | 4 | | | |
| 040A | 318484-1 | Base | | 1 | * | | |
| 040-1 A | 318484-1 | Base | X | 1 | | | |
| 040-1 B | 318484-1 | Base | | 1 | | | |
| 041 | 253807-5 | Flat washer 5 | | 2 | * | | |
| 041-1 | 253572-6 | Flat washer 5 | < | 2 | | | |
| 042 | 252103-8 | Hex. lock nut M5-8 | | 2 | | | |
| 043 | 211228-7 | Ball bearing 6202DDW | | 1 | | | |
| 044 | 310301-1 | Balancer | | 1 | | | |
| 045 | 912222-9 | Countersunk head screw M5X16 | | 1 | | | |
| 046 | 213656-2 | O-ring 53 | | 1 | | | |
| 047A | 140146-1 | Pad complete | | 1 | * | | |
| 047-1 A | 140441-9 | Pad complete | < | 1 | | | |
| 047-1 B | 140441-9 | Pad complete | | 1 | | | |
| 048 | 911111-5 | Pan head screw M4X10 W | | 4 | | | |
| A01 | 135327-0 | Dust box assembly | | 1 | | | |
| C10 | 168557-8 | Filter | | 1 | | | |
| C20 | 232246-2 | Leaf spring | | 2 | | | |
| C30 | 424144-6 | Rubber sleeve | | 1 | | | |
| C40 | 450769-0 | Dust nozzle | | 1 | | | |
| C50 | 450770-5 | Dust box | | 1 | | | |
| A02 | 451271-6 | Punch plate | | 1 | | | |
| A03A | 794563-3 | Abrasive paper 93-120 (10 pcs) | | 1 | * | | |
| A03-1 B | A-31267 | ABRASIVE PAPER 93X228 #120 | | 1 | | | |
| A04B | 821550-0 | Connector plastic case (type 2) | | 1 | | | |
| C10 | 453974-8 | Latch | | 4 | | | |
| A05B | 838028-6 | Inner tray | | 1 | | | |
| A06B | 803W22-5 | Indication label BO3711J | | 1 | | | |
| A07B | 803W23-3 | Plastic case label BO3711J | | 2 | | | |
| F02 | 194929-1 | Pad complete set | | 1 | | | |
| F03 | 194930-6 | Pad complete set | | 1 | | | |
| F05 | 194947-9 | Punch plate set | | 1 | | | |
| F06 | 194948-7 | Punch plate set | | 1 | | | |
| F12 | 195134-3 | Filter set | | 1 | | | |
| F13 | 195133-5 | Filter set | | 1 | | | |
| F14 | 197464-8 | Pad complete set | | 1 | | | |