Model No.DST112 Cordless Stapler

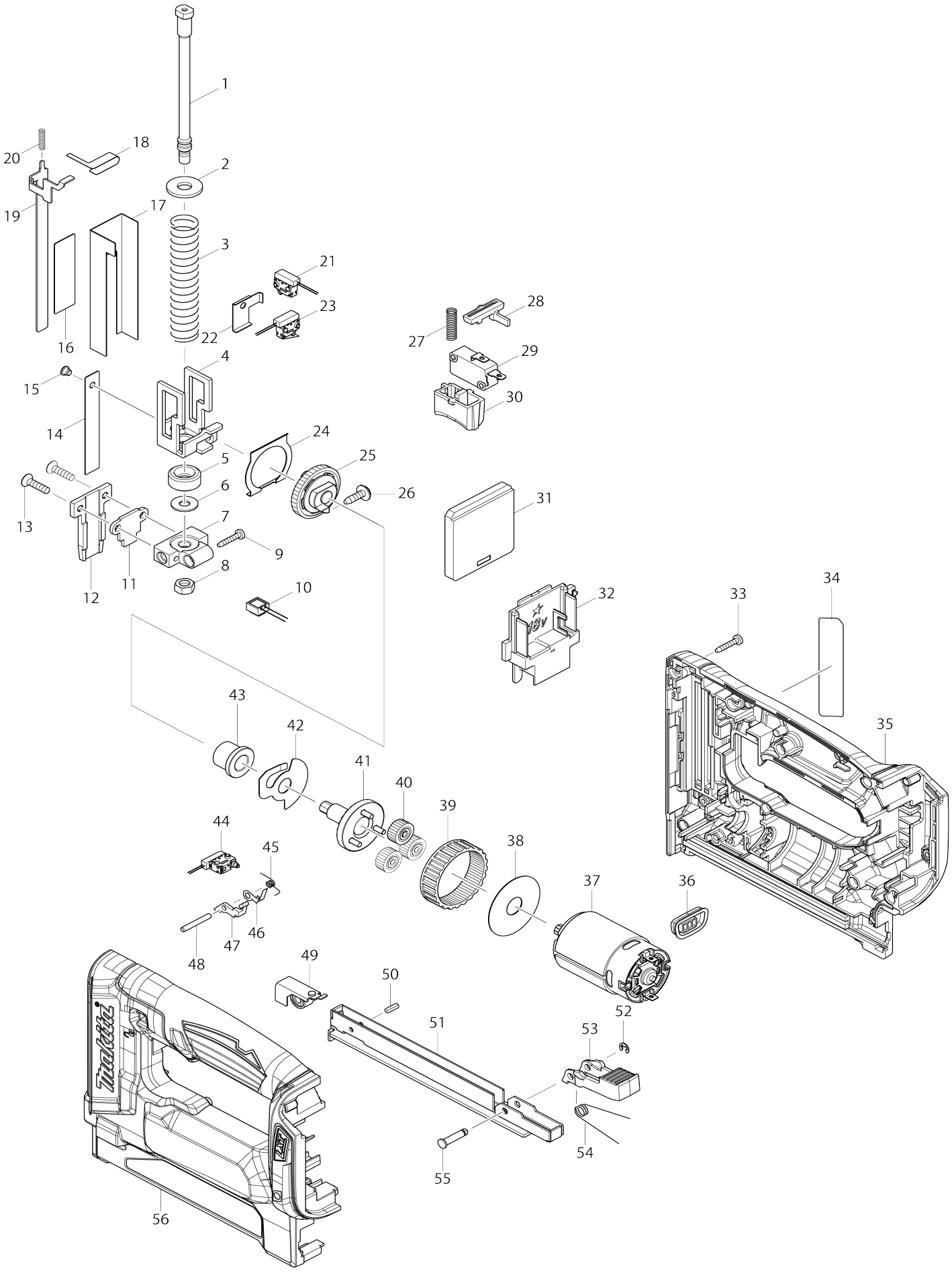

Model No.DST112 Cordless Stapler

Item No.	Parts No.	Description	Interchangeability	Q'ty	New/ Old	Note1	Note2
001	326731-6	Guide bolt		1			
002	253762-1	Flat washer 8		1			
003	232297-5	Compression spring 13		1			
004	347023-0	Hammer		1			
005	424099-5	Cushion		1			
006	253804-1	Flat washer 6		1			
007	319425-0	Holder		1	*		
007-1	319425-0	Holder	O	1			
008	931302-2	Hex. nut M6		1			
009	266130-9	Binding head tapping screw 3X16		1	*		
010	620507-6	LED circuit		1			
011	347037-9	Set plate		1			
012	326738-2	Driver guide		1			
013	251487-1	Hex. socket countersunk head screw M4X16		2			
014	347034-5	Driver		1			
015	256318-9	Flat fillister HD. pin 4		1			
016	347038-7	Upper plate		1			
017	347036-1	Guide plate		1			
018	232300-2	Leaf spring		1			
019	347042-6	Contact arm		1	*		
019-1	347316-5	Contact arm	<	1			
020	232296-7	Compression spring 3		1	*		
020-1	232337-9	Compression spring 3	<	1	*		
020-1	232337-9	Compression spring 3		1	*		
020-2	232997-7	Compression spring 3	<	1			
021	632G60-2	Switch unit		1			
022	347039-5	Slide plate		1	*		
022-1	347121-0	Slide plate	<	1			
023	632G61-0	Switch unit		1			
024	347040-0	Gear plate		1			
025	143770-9	Spur gear 43 complete		1			
026	266901-4	Binding head tapping screw 4X14		1			
027	232299-1	Compression spring 5		1			
028	456799-9	Trigger lock		1			
029	650681-6	Switch D3V-16-3A5		1	*		
029-1	632J09-0	Switch unit	S	1	*		
029-2	632M82-8	Switch unit	<	1			
030	456797-3	Trigger		1	*		
030-1	457303-7	Trigger	S	1			
031	620506-8	Controller		1	*		
031-1	620824-4	Controller	<	1			
032	643860-3	Terminal		1	*		
032-1	643899-6	Terminal	S	1			
033	266130-9	Binding head tapping screw 3X16		11			
034	852D83-8	Name plate DST112		1			

035	183D97-9	Housing set		1	*		
C10	263005-3	Rubber pin 6		2	*		
035		INC. 56			*		
035-1	183D97-9	Housing set	<	1	*		
C10	263005-3	Rubber pin 6		2	*		
035-1		INC. 56			*		
035-2	1831J1-0	Housing set	S	1	*		
C10	263005-3	Rubber pin 6		2	*		
035-2		INC. 56			*		
035-3	1832T1-6	HOUSING SET	O	1			
C10	263005-3	Rubber pin 6		2			
C20	8046G1-3	CAUTION LABEL		1			
035-3		INC. 56					
036	143778-3	Indicator panel complete		1			
037	629209-1	DC motor		1			
038	267053-4	Flat washer 12		1			
039	227166-3	Internal gear 69		1			
040	221961-3	Spur gear 27		3			
041	143777-5	Spur gear 7 complete		1			
042	345773-1	Anti back plate		1			
043	214059-3	Plane bearing 10		1			
044	632G60-2	Switch unit		1			
045	232298-3	Torsion spring 3		1			
046	347041-8	Slip plate		1			
047	456796-5	Switch plate		1			
048	256221-4	Pin 3		1			
049	143780-6	Spiral spring complete		1			
050	951051-5	Spring pin 3-8		1			
051	161467-8	Sub magazine		1			
052	961017-7	Stop ring (EXT) E-3		1			
053	456798-1	Lever		1			
054	232301-0	Torsion spring 7		1			
055	268029-4	Flat fillister HD. pin 4		1			
056	183D97-9	Housing set		1	*		
C10	263005-3	Rubber pin 6		2	*		
056		INC. 35			*		
056-1	183D97-9	Housing set	<	1	*		
C10	263005-3	Rubber pin 6		2	*		
056-1		INC. 35			*		
056-2	1831J1-0	Housing set	S	1	*		
C10	263005-3	Rubber pin 6		2	*		
056-2		INC. 35			*		
056-3	1832T1-6	HOUSING SET	O	1			
C10	263005-3	Rubber pin 6		2			
C20	8046G1-3	CAUTION LABEL		1			
056-3		INC. 35					
A01	195246-2	Safety goggle set		1	*		
A02	251314-2	Truss head screw M4X12		1			
A03	346317-0	Hook		1			
A03D	346449-3	Hook		1			
A04	821550-0	Connector plastic case (type 2)		1			

C10	453974-8	Latch		4			
A05	838582-0	Inner tray		1			
A06B	809E22-5	Indication label DST112ZJ		1			
A06C	809E24-1	Indication label DST112RFJ		1			
A06D	810E87-2	Indication label DST112Y1J		1			
A06E	810E89-8	Indication label DST112RTJ		1			
A07B	809E23-3	Plastic case label DST112ZJ		2			
A07C	809E25-9	Plastic case label DST112RFJ		2			
A07D	810E88-0	Plastic case label DST112Y1J		2			
A07E	810E90-3	Plastic case label DST112RTJ		2			
A08	***DC18RC	DC18RC FAST CHARGER		1			
A08		COMPO-PARTS					
A09	450128-8	Battery cover		1			
A10C	197600-6	Battery BL1830B set		2	*		
A10D	196235-0	Battery BL1815N set		1			
A10E	197280-8	Battery BL1850B set		2	*		
A10-1C	197600-6	Battery BL1830B set	O	2			
A10-1E	197280-8	Battery BL1850B set	O	2			
F01	197731-1	Adjuster set		1			
C10	231323-7	Compression spring 9		1			
C20	265127-5	Pan head screw M4X4		1			
C30	450702-2	Adjuster		1			
C40	450774-7	Lock sleeve		1			
C50	450775-5	Adjuster base		1			

Please state Parts No. when your order.

Print Date 06/15/2026