Model No.DPT353 CORDLESS PIN NAILER

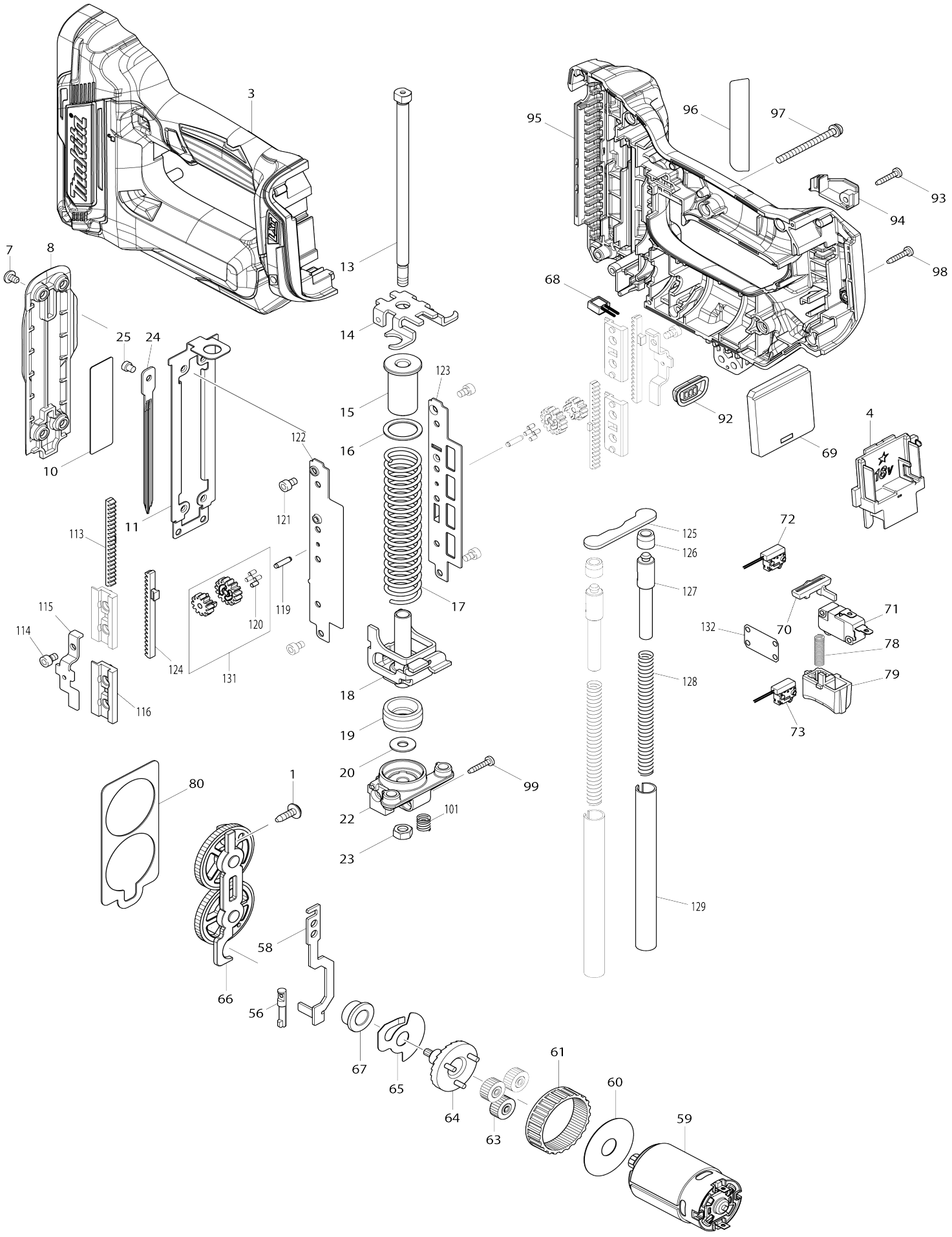

Model No.DPT353 CORDLESS PIN NAILER

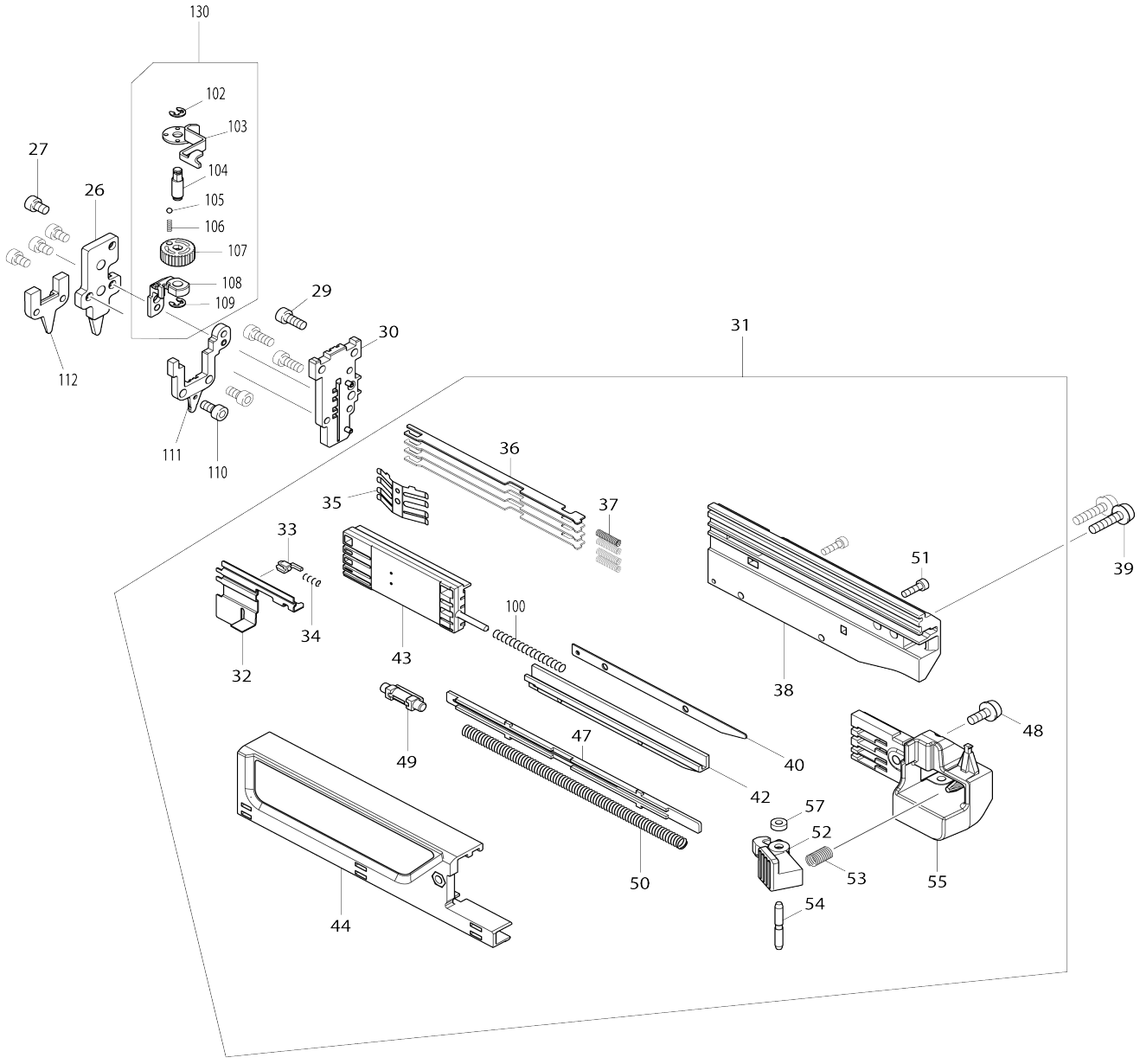

Model No.DPT353 CORDLESS PIN NAILER

Item No.	Parts No.	Description	Interchangeability	Q'ty	New/ Old	Note1	Note2
001	266901-4	Binding head tapping screw 4X14		1			
003	183F93-9	Housing set		1	*		
C10	263005-3	Rubber pin 6		2	*		
C20	252126-6	Hex. lock nut M4-7		2	*		
C30	931102-0	Hex. nut M4		1	*		
003		INC. 95			*		
003-1	183F54-9	Housing set	S	1			
C10	263005-3	Rubber pin 6		2			
C20	252126-6	Hex. lock nut M4-7		2			
C30	931102-0	Hex. nut M4		1			
003-1		INC. 95					
004	643860-3	Terminal		1	*		
004-1	643874-2	Terminal	S	1			
007	915101-0	Binding head screw M4X6		4			
008	457384-1	Front cover		1	*		
008-1	459308-3	Front cover	S	1			
010	345704-0	Upper plate		1	*		
010-1	347528-0	Upper plate	S	1			
011	347140-6	Rail		1			
013	326903-3	Guide bolt		1			
014	347143-0	Bottom plate		1	*		
014-1	347671-5	Bottom plate	S	1			
015	457389-1	Spring holder		1			
016	347148-0	Spring base		1			
017	232364-6	Compression spring 17		1			
018	347141-4	Hammer		1			
019	424952-5	Cushion		1			
020	253804-1	Flat washer 6		1			
022	319537-9	Holder		1	*		
022-1	319981-0	Holder	O	1			
023	931302-2	Hex. nut M6		1	*		
023-1	252273-3	Hex. nut M6	<	1			
024	345702-4	Driver		1			
025	268157-5	Flat fillister HD. pin 4		1	*		
025-1	256882-0	Flat fillister head pin 4	<	1			
026	144291-4	Driver guide cover complete		1	*		
026-1	140H39-0	Driver guide cover complete	S	1	*		
026-2	144291-4	Driver guide cover complete	S	1			
027	922102-1	Hex. socket head bolt M4X6		4			
029	922112-8	Hex. socket head bolt M4X10		3	*		
029-1	922127-5	Hex. socket head bolt M4X16	S	2			
030	144330-0	Driver guide complete		1			
031	135856-3	Magazine assembly		1	*		
031		INC. 32-38,40,42-44,47-55,57,			*		
031		INC. 100			*		
031-1	135897-9	Magazine assembly	<	1			
031-1		INC. 32-38,40,42-44,47-55,57,					

031-1		INC. 100					
032	347138-3	Pusher		1			
033	310176-8	Stopper		1	*		
033-1	310176-8	Stopper	S	1			
034	233018-8	Compression spring 3		1			
035	232362-0	Leaf spring		1			
036	346239-4	Nail stopper		4			
037	232367-0	Compression spring 3		4			
038	457379-4	Magazine		1	*		
038-1	458195-7	Magazine	<	1			
039	911133-5	Pan head screw M4X18 WR		2			
040	347137-5	Spacer		1			
042	144335-0	Lower rail complete		1			
043	457382-5	Nail guide holder		1			
044	457380-9	Upper rail		1			
C10	931102-0	Hex. nut M4		1			
047	457387-5	Spring cover		1			
048	911113-1	Pan head screw M4X10 WR		1			
049	457383-3	Shoulder pin 5-6		1			
050	232366-2	Compression spring 5		1			
051	266177-3	Hex. socket head bolt M3X10		2			
052	457388-3	Lever		1			
053	233117-6	Compression spring 6		1			
054	256793-9	Grooved pin 3		1			
055	457381-7	Slide door cap		1			
056	268158-3	Pin 5		1			
057	262054-7	Urethane ring 3		1			
058	347139-1	Lock arm		1			
059	629253-8	DC motor		1			
060	267053-4	Flat washer 12		1			
061	227166-3	Internal gear 69		1			
063	221961-3	Spur gear 27		3			
064	154973-0	Spur gear 7 complete		1			
065	345773-1	Anti back plate		1			
066	144290-6	Spur gear 55 complete		1	*		
066-1	140U73-8	Spur gear 55 complete	O	1			
067	214060-8	Plane bearing 10		1			
068	620507-6	LED circuit		1			
069	632J89-6	Controller unit		1			
C10	688164-6	Line filter		1	*		
070	456799-9	Trigger lock		1			
071	632J09-0	Switch unit		1	*		
071-1	632M82-8	Switch unit	<	1			
072	632G60-2	Switch unit		1			
073	632K06-2	Switch unit		1			
078	232370-1	Compression spring 5		1			
079	457386-7	Trigger		1			
080	347142-2	Gear plate		1			
092	143778-3	Indicator panel complete		1			
093	266130-9	Binding head tapping screw 3X16		1			
094	457385-9	Housing R cover		1			

095	183F93-9	Housing set		1	*		
C10	263005-3	Rubber pin 6		2	*		
C20	252126-6	Hex. lock nut M4-7		2	*		
C30	931102-0	Hex. nut M4		1	*		
095		INC. 3			*		
095-1	183F54-9	Housing set	S	1			
C10	263005-3	Rubber pin 6		2			
C20	252126-6	Hex. lock nut M4-7		2			
C30	931102-0	Hex. nut M4		1			
095-1		INC. 3					
096	852X49-8	Name plate DPT353		1			
097	911173-3	Pan head screw M4X45 WR		1			
098	266130-9	Binding head tapping screw 3X16		8			
099	266130-9	Binding head tapping screw 3X16		1	*		
100	233459-8	Compression spring 3		1			
101	232365-4	Compression spring 7		1	*		
101-1	232995-1	COMPRESSION SPRING 7	<	1			
102	961017-7	Stop ring (EXT) E-3		1			
103	347136-7	Contact arm		1			
104	326905-9	Adjuster shaft		1			
105	216031-1	Steel ball 2.3		1			
106	234254-9	Compression spring 2		1			
107	457378-6	Adjuster		1			
108	310778-0	Arm		1			
109	961017-7	Stop ring (EXT) E-3		1			
110	922107-1	Hex. socket head bolt M4X8		2			
111	144329-5	Center plate complete		1			
112	310777-2	Contact top cover		1	*		
112-1	310922-9	Contact top cover	S	1	*		
112-2	310777-2	Contact top cover	S	1			
113	310780-3	Counter weight A		2	*		
113-1	310924-5	Counter weight A	<	2	*		
113-2	313421-0	Counter weight A	<	2	*		
113-3	313665-2	Counter weight A	O	2			
114	251566-5	Hex. socket head bolt M4X6 W		2			
115	347146-4	Pinion guide		2			
116	457390-6	Counter weight holder		4	*		
116-1	413330-4	Counter weight holder	O	4			
119	326902-5	Pinion shaft		2			
120	424953-3	Damper rubber		8	*		
121	922102-1	Hex. socket head bolt M4X6		4	*		
121-1	266199-3	Hex. socket head bolt M4X6	O	4			
122	347145-6	Guide rail R		1			
123	347144-8	Guide rail L		1			
124	310781-1	Counter weight B		2			
125	347147-2	Counter stopper		1	*		
125-1	347672-3	Counter stopper	S	1			
126	424954-1	Counter cushion		2			
127	326904-1	Weight		2			
128	232363-8	Compression spring 7		2			

129	326901-7	Guide pipe		2	*		
129-1	327550-3	Guide pipe	S	2			
130	135857-1	Contact arm assembly		1			
130		INC. 102-109					
131	135855-5	Spur gear assembly		2	*		
131		INC. 120			*		
131-1	136153-0	Spur gear assembly	O	2	*		
131-2	136104-3	Spur gear assembly	O	2	*		
131-3	137137-1	Spur gear assembly	O	2			
132	457809-5	Switch guard		1			
133	922112-8	Hex. socket head bolt M4X10	S	1			
A01	195246-2	Safety goggle set		1	*		
A02	251314-2	Truss head screw M4X12		1			
A03A	346317-0	Hook		1			
A03B	346449-3	Hook		1			
A04	424955-9	Nose adapter		2	*		
A04-1	422372-7	Nose adapter	O	2			
A05	783201-2	Hex. wrench 3		1			
A06B	821550-0	Connector plastic case (type 2)		1			
C10	453974-8	Latch		4			
A07B	839128-5	Inner tray		1			
A08B	812F39-5	Indication label DPT353Y1J		1			
A09B	812F40-0	Plastic case label DPT353Y1J		2			
A10B	196235-0	Battery BL1815N set		1			
B01	127762-6	Center plate assembly		1			
B01		INC. 110-112					