Model No.DPB182 Cordless Portable Band Saw

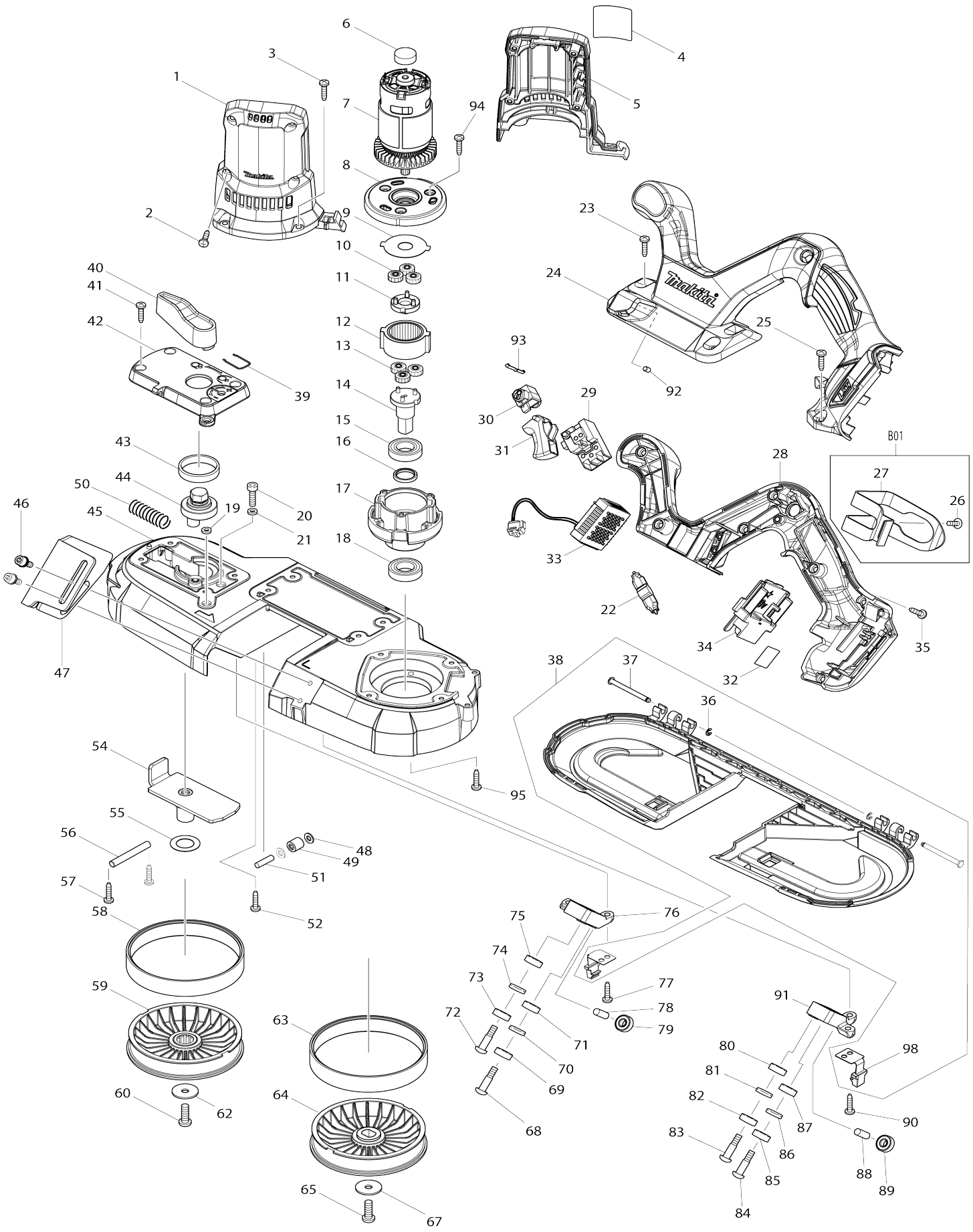

Model No.DPB182 Cordless Portable Band Saw

Item No.	Parts No.	Description	Interchangeability	Q'ty	New/ Old	Note1	Note2
001	187711-5	Motor housing set		1	*		
001		INC. 5			*		
001-1	187711-5	Motor housing set	>	1			
001-1		INC. 5					
002	266326-2	Binding head tapping screw 4X18		4			
003	266034-5	Binding head tapping screw 4X16		4			
004	855M88-1	Name plate DPB182		1	*		
004-1	855M88-1	Name plate DPB182	<	1			
005	187711-5	Motor housing set		1	*		
005		INC. 1			*		
005-1	187711-5	Motor housing set	>	1			
005-1		INC. 1					
006	421940-3	Cap		1			
007	629400-1	DC motor		1			
008	454650-7	Gear housing cover		1			
009	267855-8	Lock washer		1			
010	227331-4	Spur gear 14		3			
011	144386-3	Spur gear 7 complete		1			
012	227332-2	Internal gear 36		1			
013	226900-8	Spur gear 14		3	*		
013-1	227820-9	Spur gear 14	<	3			
014	140J06-7	Spindle complete		1			
015	211242-3	Ball bearing 6902ZZ		1	*		
015-1	210153-9	Ball bearing 6902ZZ	O	1			
016	257348-3	Ring 15		1			
017	319793-1	Gear housing		1			
018	211242-3	Ball bearing 6902ZZ		1	*		
018-1	210153-9	Ball bearing 6902ZZ	O	1			
019	262130-7	Urethane ring 4		1			
020	265382-9	Hex. socket head bolt M5X20		1			
021	262130-7	Urethane ring 4		1			
022	632C27-6	Fuse unit	S	1			
023	266034-5	Binding head tapping screw 4X16		4			
024	187763-6	Handle set		1			
C10	252126-6	Hex. lock nut M4-7		2			
C20	263005-3	Rubber pin 6		2			
024		INC. 28					
025	266034-5	Binding head tapping screw 4X16		2			
028	187763-6	Handle set		1			
C10	252126-6	Hex. lock nut M4-7		2			
C20	263005-3	Rubber pin 6		2			
028		INC. 24					
029	650705-8	Switch TG73BDS-1		1			
030	419504-5	Lock off button		1			
031	454651-5	Switch lever		1			

032	855M95-4	Serial No. label DPB182		1			
033	632L42-4	Controller unit		1			
C10	654208-4	Receptacle		1			
C20	654069-2	Receptacle 41-187N		1			
034	643874-2	Terminal		1			
035	266326-2	Binding head tapping screw 4X18		7			
036	961017-7	Stop ring (EXT) E-3		2			
037	256689-4	Flat fillister HD. pin 4		2			
038	197975-3	Wheel cover set		1			
038		INC. 36,37,98					
039	231955-0	Ring spring 12		1			
040	272230-5	Lever 54		1			
041	266034-5	Binding head tapping screw 4X16		4			
042	459084-9	Lever holder		1			
043	214408-4	Plane bearing 30		1			
044	326351-6	Lever shaft		1			
045	140J09-1	Frame complete		1			
C10	424736-1	Sponge		1			
C20	263005-3	Rubber pin 6		1			
046	922218-2	Hex. socket head bolt M5X14 WR		2			
047	346728-9	Stopper plate		1			
048	267010-2	Flat washer 5		2			
049	212199-1	Needle bearing 510		1			
050	234313-9	Compression spring 9		1			
051	256155-1	Pin 5		1			
052	266034-5	Binding head tapping screw 4X16		1			
054	162564-3	Slide plate		1			
055	267164-5	Flat washer 15		1			
056	268241-6	Pin 6		1			
057	266034-5	Binding head tapping screw 4X16		2			
058	424589-8	Rubber tire		1			
059	140J07-5	Wheel complete A		1			
060	265484-1	Hex. socket button head bolt M6X17		1			
062	267173-4	Flat washer 6		1			
063	424589-8	Rubber tire		1			
064	459087-3	Wheel B		1			
065	265484-1	Hex. socket button head bolt M6X17		1			
067	267173-4	Flat washer 6		1			
068	251337-0	Pan head shoulder screw M5		1			
069	210187-2	Ball bearing 696ZZ		1			
070	941152-7	Flat washer 6		1			
071	210187-2	Ball bearing 696ZZ		1			
072	251337-0	Pan head shoulder screw M5		1			
073	210187-2	Ball bearing 696ZZ		1			
074	941152-7	Flat washer 6		1			
075	210187-2	Ball bearing 696ZZ		1			
076	319400-6	Upper holder 42		1			

077	266034-5	Binding head tapping screw 4X16		2			
078	256033-5	Pin 6		1			
079	210187-2	Ball bearing 696ZZ		1			
080	210187-2	Ball bearing 696ZZ		1			
081	941152-7	Flat washer 6		1			
082	210187-2	Ball bearing 696ZZ		1			
083	251337-0	Pan head shoulder screw M5		1			
084	251337-0	Pan head shoulder screw M5		1			
085	210187-2	Ball bearing 696ZZ		1			
086	941152-7	Flat washer 6		1			
087	210187-2	Ball bearing 696ZZ		1			
088	256033-5	Pin 6		1			
089	210187-2	Ball bearing 696ZZ		1			
090	266034-5	Binding head tapping screw 4X16		2			
091	319074-3	Lower holder 42		1			
092	263002-9	Rubber pin 4		1			
093	232201-4	Leaf spring		1			
094	266034-5	Binding head tapping screw 4X16		3			
095	266034-5	Binding head tapping screw 4X16		3			
098	161427-0	Hook		2			
A01	783202-0	Hex. wrench 4		1			
A02	B-40559	PORTABLE BANDSAW BLADE 18TPI		1			
F02	197975-3	Wheel cover set		1			