Model No.DP4021 13MM DRILL

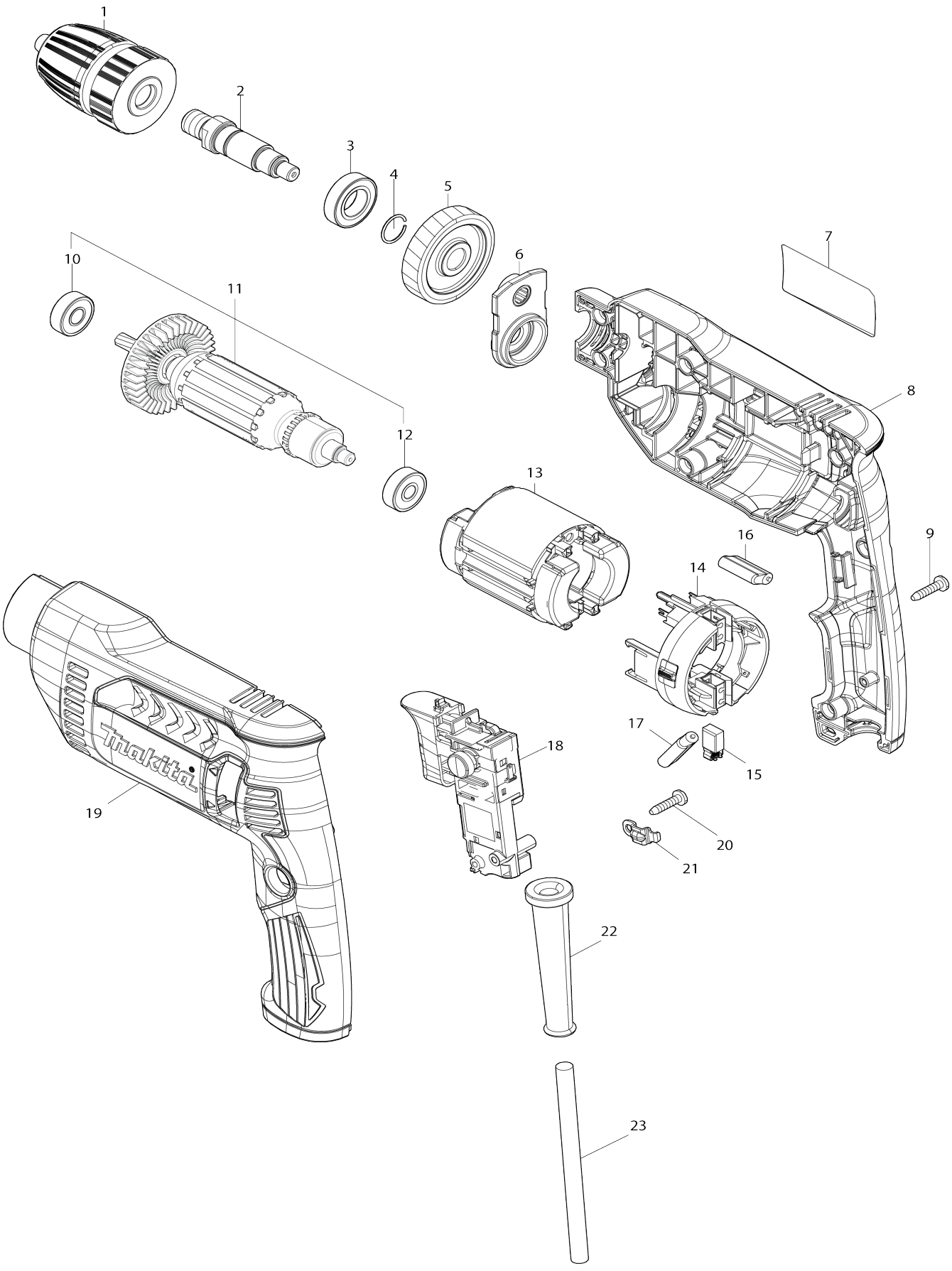

Model No.DP4021 13MM DRILL

Item No.	Parts No.	Description	Interchangeability	Q'ty	New/ Old	Note1	Note2
001	763267-8	KEYLESS DRILL CHUCK 13		1			
002	327D32-9	SPINDLE		1			
003	210153-9	BALL BEARING 6902ZZ		1			
004	233925-5	RING SPRING 13		1			
005	227B42-3	HELICAL GEAR 45		1			
006	141V10-1	BEARING BRACKET COMPLETE		1			
007	8147D0-2	DP4021 NAME PLATE		1			
008	1830U0-3	HOUSING SET		1			
D10		INC. 19					
009	266326-2	TAPPING SCREW 4X18		7			
010	210029-0	BALL BEARING 608ZZ		1			
011	511B13-3	ARMATURE ASSEMBLY 220-240V		1			
C10	241881-5	FAN 52		1			
D10		INC. 10,12					
012	210030-5	BALL BEARING 627ZZ		1			
013	634859-9	FIELD 220-240V		1			
014	632S42-6	BRUSH HOLDER UNIT		1			
015	1914L5-0	CARBON BRUSH SET		1			
016	632V45-8	CHOKE COIL UNIT		1			
017	632V46-6	CHOKE COIL UNIT		1			
018	650054-3	SWITCH TG853TB-6		1			
019	1830U0-3	HOUSING SET		1			
D10		INC. 8					
020	266326-2	TAPPING SCREW 4X18		1			
021	687681-3	STRAIN RELIEF		1			
022	682569-2	CORD GUARD 8-85		1			
023	665383-1	POWER SUPPLY CORD 1.0-2-2.0		1			

Please state Parts No. when your order.

Print Date 05/30/2024