Model No.DLS600 165MM CORDLESS MITER SAW

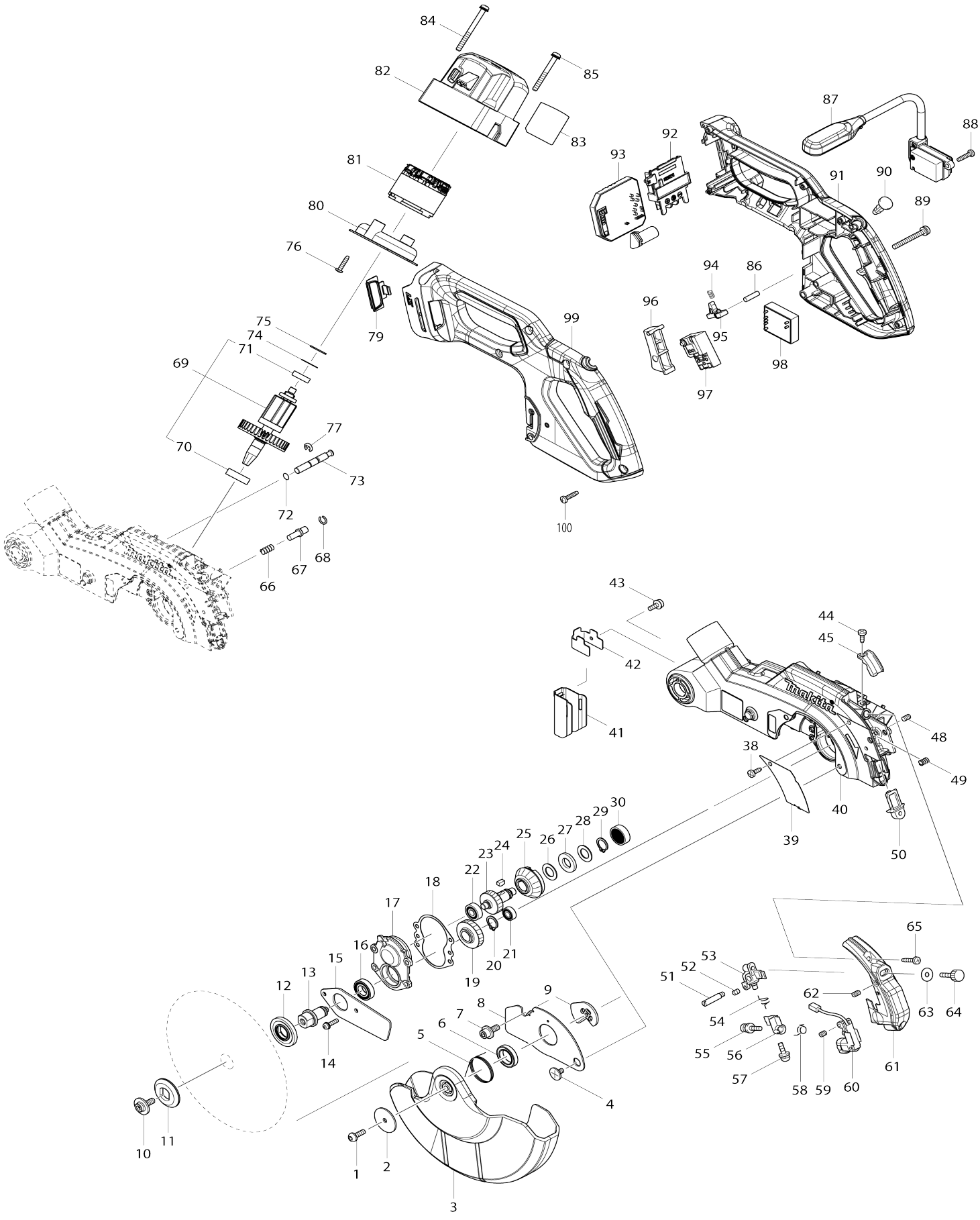

Model No.DLS600 165MM CORDLESS MITER SAW

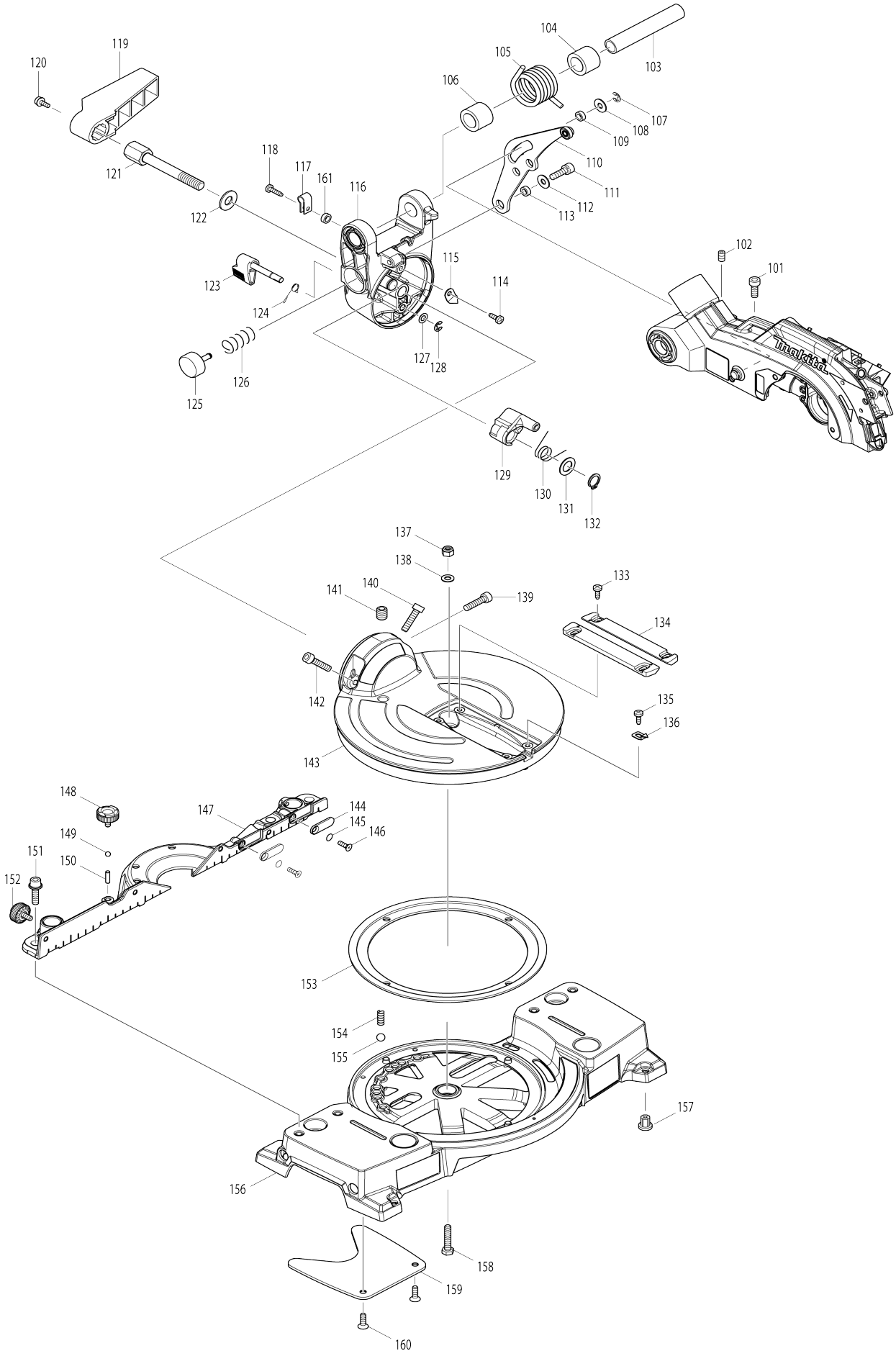

Model No.DLS600 165MM CORDLESS MITER SAW

Item No.	Parts No.	Description	Interchangeability	Q'ty	New/ Old	Note1	Note2
001	265491-4	Hex. socket button head bolt M5 X16		1			
002	267136-0	Flat washer 5		1			
003	458077-3	Safety cover		1			
004	265008-3	Flat head shoulder screw M5		1			
005	232311-7	Torsion spring 30		1			
006	210150-5	Ball bearing 6803DDW		1	*		
006-1	210322-2	Ball bearing 6803DDW	O	1			
007	266732-1	Hex. socket head bolt M6X16		1			
008	347060-4	Center cover		1			
009	347059-9	Center plate		1			
010	266733-9	Hex. socket head flange bolt M6 X16		1			
011	224405-2	Outer flange 35		1			
012	224593-5	Inner flange 35		1			
013	325866-0	Spindle		1	*		
013-1	327G43-2	SPINDLE	<	1			
014	911128-8	Pan head screw M4X16 WR		4			
015	347295-7	Bearing retainer		1			
016	211288-9	Ball bearing 6901DDW		1			
017	318534-2	Bearing box		1			
018	442152-5	Gasket		1			
019	227727-9	Helical gear 39		1			
020	961052-5	Retaining ring (EXT) S-12		1			
021	210006-2	Ball bearing 696ZZ		1			
022	210017-7	Ball bearing 607DDW		1			
023	227726-1	Helical gear 31		1			
024	254011-9	Woodruff key 4		1			
025	227565-9	Spiral bevel gear 35		1			
026	253744-3	Flat washer 12		1			
027	261104-5	Rubber washer 12		1			
028	253744-3	Flat washer 12		1			
029	961052-5	Retaining ring (EXT) S-12		1			
030	210005-4	Ball bearing 608DDW		1			
038	266026-4	Binding head tapping screw 4X12		1			
039	346171-2	Cover plate		1			
040	144796-4	Blade case complete		1			
C10	263002-9	Rubber pin 4		4			
C20	263005-3	Rubber pin 6		1			
041	424870-7	Guard		1			
042	347057-3	Guard plate		1			
043	911113-1	Pan head screw M4X10 WR		1			
044	266026-4	Binding head tapping screw 4X12		1			
045	458075-7	Lead cover		1			
048	266229-0	Hex. socket set screw (cup point) M5X8		1			
049	233471-8	Compression spring 6		1			

050	418104-8	Lens		1			
051	266306-8	Shoulder screw M5		1			
052	266318-1	Hex. socket set screw (flat point) M4X6		1			
053	419379-2	Block C		1			
054	231664-1	Torsion spring 9		1			
055	911003-8	Pan head screw M3X6 WR		1			
056	419378-4	Block B		1			
057	911003-8	Pan head screw M3X6 WR		1			
058	231664-1	Torsion spring 9		1			
059	266318-1	Hex. socket set screw (flat point) M4X6		1			
060	638442-4	Laser circuit complete		1			
061	140344-7	Laser cover complete		1			
062	266229-0	Hex. socket set screw (cup point) M5X8		1			
063	253807-5	Flat washer 5		1			
064	265753-0	Thumb screw M5X24		1			
065	266042-6	Binding head tapping screw 4X20		2			
066	231240-1	Compression spring 7		1			
067	256633-1	Collar HD. pin 6		1			
068	231928-3	Ring spring 8		1			
069	519400-8	Rotor assembly		1			
069		INC. 70,71					
070	211131-2	Ball bearing 6001DDW		1			
071	210017-7	Ball bearing 607DDW		1			
072	213021-5	O-ring 5		1			
073	326769-1	Stopper pin		1			
074	253842-3	Flat washer 14		1			
075	261153-2	Urethane washer 15		1			
076	265995-6	Binding head tapping screw 4X18		2			
077	961018-5	Stop ring (EXT) E-5		1			
079	144033-6	Indication plate complete		1			
080	456908-0	Baffle plate		1			
081	629215-6	Stator		1	*		
081-1	629B61-9	Stator	S	1			
082	456910-3	Motor housing		1			
083	853T32-4	Name plate DLS600		1			
084	911278-9	Pan head screw M5X55 WR		2			
085	911268-2	Pan head screw M5X45 WR		2			
086	256123-4	Pin 5		1			
087	620558-9	LED circuit		1	*		
087-1	620C12-1	LED circuit	O	1			
088	265995-6	Binding head tapping screw 4X18		2			
089	911268-2	Pan head screw M5X45 WR		1			
090	417113-4	Switch button		1			
091	183E52-7	Handle set		1			
C10	263005-3	Rubber pin 6		2			
091		INC. 99					
092	643874-2	Terminal		1			

093	620761-2	Controller A		1	*		
093-1	620L27-2	Controller A	S	1			
094	231026-3	Compression spring 4		1			
095	416533-9	Lock off lever		1			
096	452130-7	Switch lever		1			
097	650705-8	Switch TG73BDS-1		1			
098	620551-3	Power supply circuit		1			
099	183E52-7	Handle set		1			
C10	263005-3	Rubber pin 6		2			
099		INC. 91					
100	265995-6	Binding head tapping screw 4X18		6			
101	266757-5	Hex. socket head bolt M6X16		1			
102	251961-9	Hex. socket set screw (flat point) M6X10		1			
103	331350-5	Pin 16-90		1			
104	416535-5	Sleeve 17		1			
105	232310-9	Torsion spring 28		1			
106	416535-5	Sleeve 17		1			
107	961018-5	Stop ring (EXT) E-5		1			
108	253804-1	Flat washer 6		1			
109	257163-5	Ring 6		1			
110	144791-4	Link plate complete		1			
111	922331-6	Hex. socket head bolt M6X20 W		1			
112	253804-1	Flat washer 6		1			
113	257163-5	Ring 6		1			
114	266026-4	Binding head tapping screw 4X12		1			
115	347058-1	Pointer		1	*		
115-1	458646-0	Pointer	O	1			
116	144795-6	Arm complete		1			
C10	816438-7	Operation label		1			
117	687045-1	Strain relief		1			
118	266034-5	Binding head tapping screw 4X16		1			
119	416006-2	Lever 100		1			
120	911113-1	Pan head screw M4X10 WR		1			
121	251495-2	Hex. head bolt M10		1			
122	253024-7	Flat washer 10		1			
123	272266-4	Lever 25		1			
124	233563-3	Torsion spring 8		1			
125	415208-7	Release button		1			
126	233031-6	Compression spring 12		1			
127	253726-5	Flat washer 6		1			
128	961018-5	Stop ring (EXT) E-5		1			
129	318533-4	Stopper		1			
130	231646-3	Torsion spring 14		1			
131	253744-3	Flat washer 12		1			
132	961052-5	Retaining ring (EXT) S-12		1			
133	266026-4	Binding head tapping screw 4X12		4			
134	456907-2	Kerf board		2			
135	266026-4	Binding head tapping screw 4X1		1			

		2					
136	816128-2	Pointer		1			
137	252014-7	Hex. lock nut M6-10		1			
138	941151-9	Flat washer 6		1			
139	251582-7	Hex. socket head bolt M6X25		1			
140	251582-7	Hex. socket head bolt M6X25		1			
141	251966-9	Hex. socket set screw (flat point) M10X12		1			
142	251582-7	Hex. socket head bolt M6X25		1			
143	144028-9	Turn base complete		1			
144	346169-9	Fence plate		2			
145	213021-5	O-ring 5		2			
146	265156-8	Countersunk head screw M4X10		2			
147	319646-4	Guide fence		1			
148	265785-7	Thumb screw M5X10		1			
149	216008-6	Steel ball 4		1			
150	256034-3	Pin 4		1			
151	922344-7	Hex. socket head bolt M6X25 WG		4			
152	265785-7	Thumb screw M5X10		1			
153	450138-5	Slide plate		1			
154	231038-6	Compression spring 6		1			
155	216004-4	Steel ball 7.9		1			
156	144792-2	Base complete		1			
C10	809V03-1	Miter scale plate		1			
C20	813L22-1	Caution label		2			
C30	810486-8	Caution label		1			
C40	810064-4	Caution label		1			
157	286255-3	Cap 13		4	*		
157-1	286044-6	Cap 13	O	4			
158	921352-5	Hex. head bolt M6X30		1			
159	144034-4	Sub plate complete		1			
160	912222-9	Countersunk head screw M5X16		2			
161	257163-5	Ring 6		1			
162	620K37-3	Controller B	S	1			
163	652119-7	Pan head screw M2X6	S	6			
A01	122940-3	Vise assembly		1			
C10	251887-5	Thumb screw M6X10		1			
C20	326006-3	Vise rod		1			
C30	265733-6	Thumb screw M10X60		1			
C40	316938-2	Vise arm		1			
C50	253804-1	Flat washer 6		1			
C60	343651-9	Vise plate		1			
C70	251370-2	Pan head shoulder screw M5X15.5		1			
A02	122884-7	Dust bag assembly		1			
C10	410602-8	Fastener		1			
A03	762001-3	Triangular rule		1			
A04	783208-8	Hex. wrench 2.5		1			
A05	783203-8	Hex. wrench 5		1			
A06	126695-2	Sub fence assembly		1			
A07	B-56487	TCT SAW BLADE 165X20X64T WO OD		1			