Model No.DLS211 305MM DC SLIDE CPD. MITER SAW

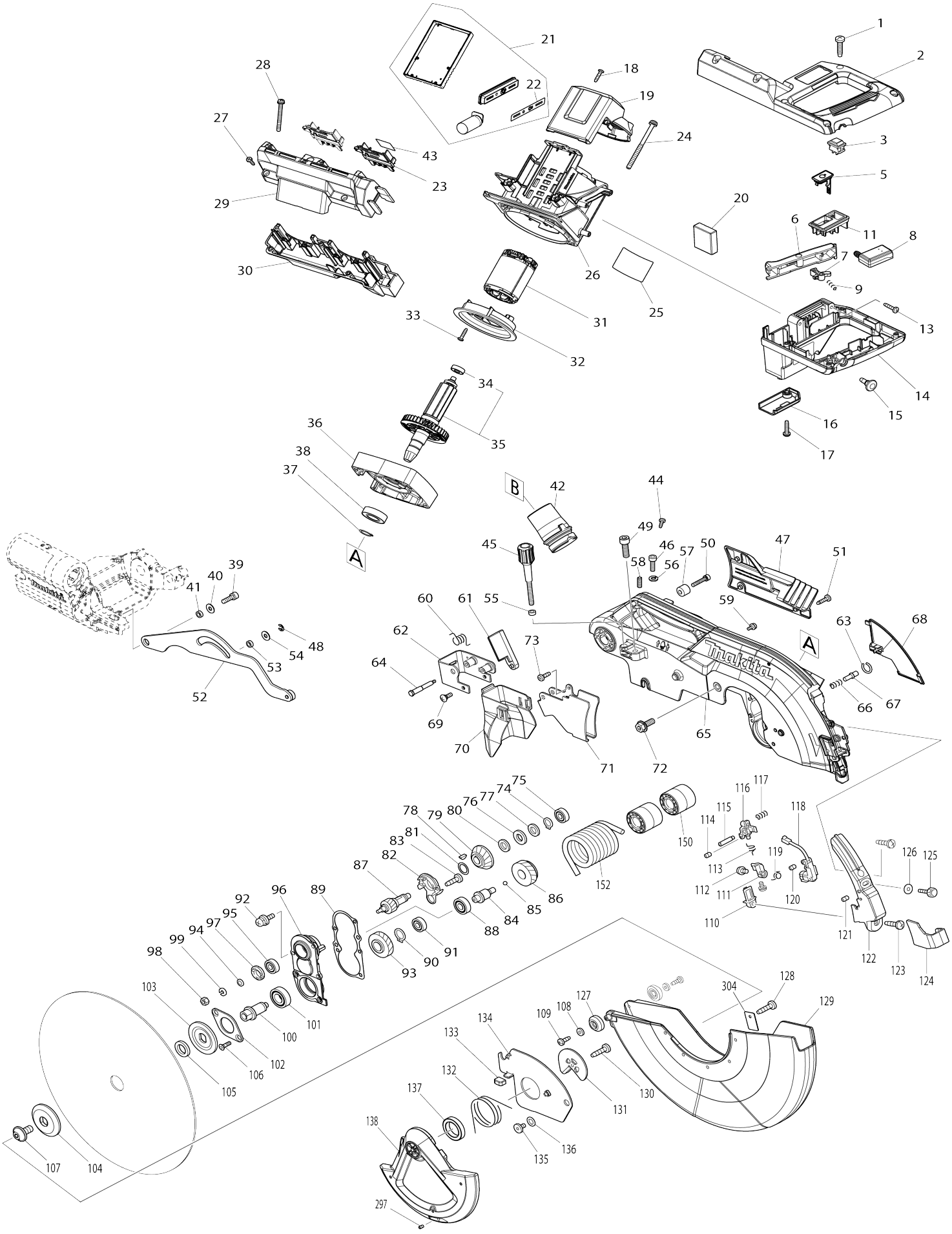

Model No.DLS211 305MM DC SLIDE CPD. MITER SAW

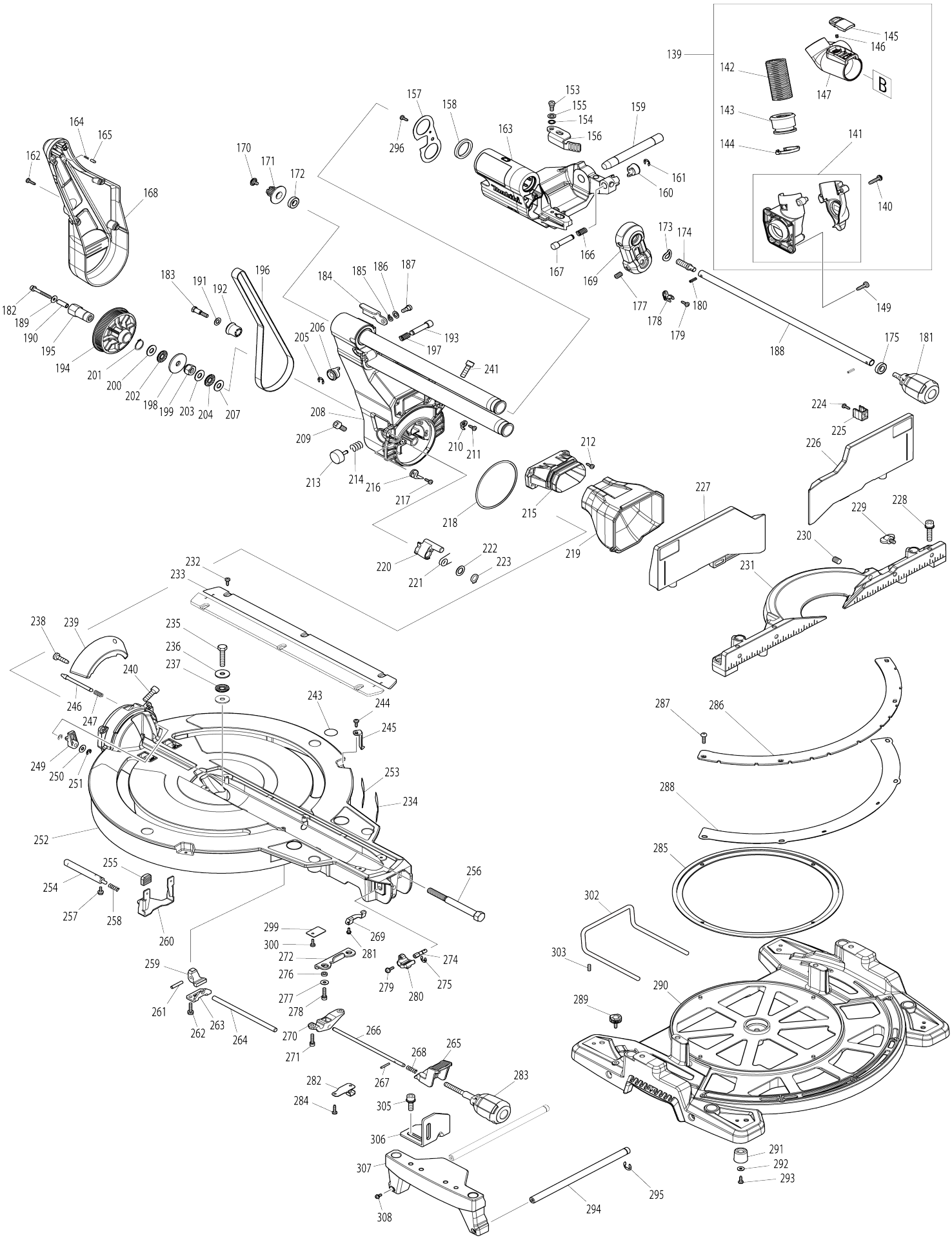

Model No.DLS211 305MM DC SLIDE CPD. MITER SAW

Item No.	Parts No.	Description	Interchangeability	Q'ty	New/ Old	Note1	Note2
001	265995-6	Binding head tapping screw 4X18		6			
002	183H70-3	Handle set		1			
C10	810486-8	Caution label		1			
002		INC. 14					
003	632L09-2	Switch unit		1			
005	140G30-2	Cap complete		1			
C10	213218-6	O-ring 16		1			
C20	818H48-4	Cap label		1			
006	457935-0	Switch lever		1			
007	416356-5	Lock off lever		1			
008	651083-9	Switch C3XA-1PSPM		1			
009	231026-3	Compression spring 4		1			
011	458079-9	Switch cover		1			
013	265995-6	Binding head tapping screw 4X18		3			
014	183H70-3	Handle set		1			
C10	810486-8	Caution label		1			
014		INC. 2					
015	451037-4	Switch button		1			
016	451000-7	Lead cover holder		1			
017	265995-6	Binding head tapping screw 4X18		1			
018	265995-6	Binding head tapping screw 4X18		2			
019	457933-4	Rear cover		1			
020	620742-6	Power supply circuit		1			
021	620B81-6	Controller complete		1	*		
021		INC. 22			*		
021-1	620H47-2	Controller complete	<	1	*		
021-1		INC. 22			*		
021-2	620H47-2	Controller complete	O	1			
021-2		INC. 22					
022	813T74-0	Indication label		1			
023	643874-2	Terminal		2			
024	911948-0	Pan head screw M6X80 WR		4			
025	855P61-9	Name plate DLS211		1			
026	457906-7	Motor housing		1			
027	265995-6	Binding head tapping screw 4X18		3			
028	911273-9	Pan head screw M5X50 WR		2			
029	183L40-6	Battery housing set		1			
C10	263005-3	Rubber pin 6		4			
029		INC. 30					
030	183L40-6	Battery housing set		1			
C10	263005-3	Rubber pin 6		4			
030		INC. 29					
031	629282-1	Stator		1	*		
031-1	629B80-5	Stator	S	1			

032	457934-2	Baffle plate		1	*		
032-1	413E35-6	Baffle plate	O	1			
033	265995-6	Binding head tapping screw 4X18		2			
034	211021-9	Ball bearing 607LLB		1			
035	519554-1	Rotor assembly		1			
035		INC. 34					
036	318471-0	Motor bracket		1			
037	961057-5	Retaining ring (EXT) S-17		1			
038	211275-8	Ball bearing 6003DDW		1			
039	922331-6	Hex. socket head bolt M6X20 W		1			
040	253804-1	Flat washer 6		1			
041	257461-7	Ring 6		1			
042	459250-8	Dust nozzle		1			
043	855P68-5	Serial No. label DLS211		1			
044	266034-5	Binding head tapping screw 4X16		1			
045	251554-2	Thumb screw M6X40		1			
046	265A36-4	Hex. socket head bolt M6X16		1			
047	458146-0	Logo plate		1			
048	961018-5	Stop ring (EXT) E-5		1			
049	251547-9	Hex. socket head bolt M8X25		1			
050	922251-4	Hex. socket head bolt M5X30 W		1			
051	266034-5	Binding head tapping screw 4X16		3			
052	140J53-8	Link plate complete		1			
053	257461-7	Ring 6		1			
054	253804-1	Flat washer 6		1			
055	262001-8	Urethane ring 5		1			
056	253428-3	Spring washer 6		1			
057	257449-7	Sleeve 6		1			
058	266321-2	Hex. socket set screw (flat point) M6X16		1			
059	911114-9	Pan head screw M4X10 WG		2			
060	232412-1	Torsion spring 11		1			
061	457764-1	Dust guide plate		1			
062	161647-6	Guard holder		1			
063	231928-3	Ring spring 8		1			
064	251544-5	Hex. head shoulder bolt M4		1			
065	140J89-7	Blade case complete		1			
C10	263005-3	Rubber pin 6		3			
C20	810064-4	Caution label		1			
C30	810354-5	Laser beam label		1			
066	231240-1	Compression spring 7		1			
067	256633-1	Collar HD. pin 6		1			
068	458148-6	Lead cover		1			
069	265028-7	Pan head shoulder screw M4X11		1	*		
069-1	265D50-8	Pan head screw M4X11	O	1	*		
069-2	265028-7	Pan head shoulder screw M4X11	O	1			
070	422235-7	Guard		1			
071	347308-4	Guard plate		1			
072	266283-4	Hex. socket hex. head flange bolt M8X20		1			

073	266020-6	Binding head tapping screw 4X12		1			
074	961052-5	Retaining ring (EXT) S-12		1			
075	210005-4	Ball bearing 608DDW		1			
076	261104-5	Rubber washer 12		1			
077	253744-3	Flat washer 12		1			
078	254001-2	Woodruff key 4		1			
079	227550-2	Spiral bevel gear 32		1			
080	253744-3	Flat washer 12		1			
081	253313-0	Thin washer 14		1			
082	451002-3	Grease holder		1			
083	266026-4	Binding head tapping screw 4X12		2			
084	325643-0	Gear shaft		1			
085	216024-8	Steel ball 4		1			
086	227702-5	Helical gear 27		1			
087	227701-7	Helical gear 14		1			
088	210067-2	Ball bearing 6000ZZ		1			
089	442147-8	Gasket		1			
090	961055-9	Retaining ring (EXT) S-15		1			
091	210005-4	Ball bearing 608DDW		1			
092	911223-4	Pan head screw M5X16 WR		3			
093	227703-3	Helical gear 28		1			
094	267010-2	Flat washer 5		1			
095	210005-4	Ball bearing 608DDW		1			
096	158957-0	Bearing box complete		1			
C10	263002-9	Rubber pin 4		1			
097	285847-5	Bearing retainer 14-23		1			
098	931202-6	Hex. nut M5		1			
099	253427-5	Spring washer 5		1			
100	325644-8	Spindle		1			
101	211236-8	Ball bearing 6002DDW		1			
102	285732-2	Bearing retainer 51		1			
103	224431-1	Inner flange 53		1			
104	224432-9	Outer flange 53		1			
105	257262-3	Ring 16		1			
106	265034-2	Countersunk head screw M5X16		2	*		
106-1	265D49-3	Countersunk head screw M5X16	O	2	*		
106-2	265034-2	Countersunk head screw M5X16	O	2			
107	266755-9	Hex. socket head flange bolt M10X20		1			
108	941051-3	Flat washer 4		2			
109	266020-6	Binding head tapping screw 4X12		2			
110	418104-8	Lens		1			
111	419378-4	Block B		1			
112	911003-8	Pan head screw M3X6 WR		2			
113	231664-1	Torsion spring 9		1			
114	266318-1	Hex. socket set screw (flat point) M4X6		1			
115	266306-8	Shoulder screw M5		1			
116	419379-2	Block C		1			
117	233471-8	Compression spring 6		1			

118	638651-5	Laser circuit complete		1			
119	231664-1	Torsion spring 9		1			
120	266318-1	Hex. socket set screw (flat point) M4X6		1			
121	266229-0	Hex. socket set screw (cup point) M5X8		2			
122	458903-6	Laser cover		1			
123	266034-5	Binding head tapping screw 4X16		2			
124	457664-5	Protector		1			
125	265753-0	Thumb screw M5X24		1			
126	267066-5	Flat washer 5		1			
127	424193-3	Roller		2			
128	266385-6	Binding head tapping screw 4X14		3			
129	458144-4	Safety cover B		1			
130	266385-6	Binding head tapping screw 4X14		1			
131	347213-5	Center plate		1			
132	231634-0	Torsion spring 45		1			
133	424190-9	Cushion		1			
134	347214-3	Center cover		1			
135	265985-9	Hex. socket shoulder head bolt M6X9		1			
136	253932-2	Wave washer 10		1			
137	210168-6	Ball bearing 6805DDW		1			
138	458437-9	Safety cover A		1			
139	127274-9	Dust nozzle assembly		1	*		
139		INC. 140-147			*		
139-1	127274-9	Dust nozzle assembly	O	1			
139-1		INC. 141-147					
140	265995-6	Binding head tapping screw 4X18		3	*		
141	183H71-1	Hose connector set		1	*		
141-1	413J67-3	Hose connector	S	1			
142	245048-7	Hose 28-0.5		1			
143	457672-6	Sleeve		1			
144	457673-4	Stopper		1			
145	458939-5	Button A		1			
146	232485-4	Compression spring 5		1			
147	459249-3	Hose joint		1			
149	266034-5	Binding head tapping screw 4X16		3			
150	458149-4	Sleeve 17		2			
152	233542-1	Torsion spring 40		1			
153	251267-5	Pan head shoulder screw M6		1			
154	253948-7	Wave washer 8		1			
155	253835-0	Flat washer 8		1			
156	347221-6	Stopper arm		1			
157	347222-4	Front arm plate		1			
158	262076-7	Felt ring 30		2			
159	326994-4	Rod 16		1			
160	271437-0	Knob 22		1			
161	961013-5	Stop ring (EXT) E-7		1			

162	266034-5	Binding head tapping screw 4X16		4			
163	144912-8	Front arm complete		1			
C10	263005-3	Rubber pin 6		2			
164	233151-6	Compression spring 4		1			
165	256364-2	Pin 4		1			
166	232384-0	Compression spring 10		1			
167	326977-4	Stopper pin		1			
168	458145-2	Arm cover		1			
169	144658-6	Holder complete		1			
C10	812X89-8	Operation label		1			
170	265008-3	Flat head shoulder screw M5		1			
171	222191-9	Pulley 17-19.3		1			
172	210167-8	Ball bearing 6900LLB		1			
173	267804-5	Wave washer 15		1			
174	326975-8	Shaft		1			
175	210167-8	Ball bearing 6900LLB		1			
177	913416-9	Hex. socket set screw (cup point) M8X12		2			
178	416536-3	Wrench holder		1			
179	266026-4	Binding head tapping screw 4X12		1			
180	951107-4	Spring pin 4-14		2			
181	273016-0	Grip 50B		1			
182	266440-4	Hex. socket head bolt M5X40		1	*		
182-1	265B37-8	Hex. socket head bolt M5X40 W M	O	1	*		
182-2	265D57-4	Hex. socket head bolt M5X40 W M	O	1	*		
182-3	265B37-8	Hex. socket head bolt M5X40 W M	O	1			
183	251545-3	Hex. head shoulder bolt M6		1			
184	144930-6	Stopper lever complete		1			
C10	812X87-2	Operation label		1			
185	253948-7	Wave washer 8		1			
186	253835-0	Flat washer 8		1			
187	251267-5	Pan head shoulder screw M6		1			
188	327054-5	Pin 9-418		1			
189	253194-2	Flat washer 5		1			
190	257436-6	Sleeve 5		1			
191	253165-9	Flat washer 8		1			
192	457666-1	Sleeve 20		1			
193	326977-4	Stopper pin		1			
194	222192-7	Pulley 17-87.8		1			
195	327053-7	Hex. nut M10-19		1			
196	225102-3	Synchro belt 15-810		1			
197	232384-0	Compression spring 10		1			
198	253388-9	Flat washer 10		1			
199	252244-0	Hex. lock nut M10-17		1			
200	253024-7	Flat washer 10		1			
201	961057-5	Retaining ring (EXT) S-17		1			
202	216413-7	Thrust needle cage 1024		1			
203	253024-7	Flat washer 10		1			

204	216413-7	Thrust needle cage 1024		1			
205	961013-5	Stop ring (EXT) E-7		1			
206	271437-0	Knob 22		1			
207	253024-7	Flat washer 10		1			
208	144911-0	Arm complete		1			
C10	812X88-0	Operation label		1			
209	251547-9	Hex. socket head bolt M8X25		1			
210	458151-7	Pointer R		1			
211	266026-4	Binding head tapping screw 4X12		1			
212	266034-5	Binding head tapping screw 4X16		4			
213	415208-7	Release button		1			
214	233031-6	Compression spring 12		1			
215	457654-8	Dust guide holder		1			
216	458150-9	Pointer L		1			
217	266026-4	Binding head tapping screw 4X12		1			
218	253389-7	Washer 94		1			
219	422229-2	Dust guide		1			
220	319593-9	Stopper		1			
221	231646-3	Torsion spring 14		1			
222	253744-3	Flat washer 12		1			
223	961052-5	Retaining ring (EXT) S-12		1			
224	266026-4	Binding head tapping screw 4X12		2			
225	457668-7	Holder		2			
226	144925-9	Upper fence R complete		1			
C10	810503-4	Caution label		1			
227	144922-5	Upper fence L complete		1			
C10	810503-4	Caution label		1			
228	922458-2	Hex. socket head bolt M8X35 WR		4			
229	251887-5	Thumb screw M6X10		2			
230	251561-5	Hex. socket set screw (flat point) M10X12		2			
231	319565-4	Guide fence		1			
232	266026-4	Binding head tapping screw 4X12		6			
233	451201-7	Kerf board		2			
235	265442-7	Hex. head bolt M8X40		1			
236	253852-0	Flat washer 8		2			
237	216413-7	Thrust needle cage 1024		1			
238	266385-6	Binding head tapping screw 4X14		2			
239	458147-8	Bevel scale plate		1			
240	251547-9	Hex. socket head bolt M8X25		1			
241	251547-9	Hex. socket head bolt M8X25		1			
243	813L22-1	Caution label		2			
244	266026-4	Binding head tapping screw 4X12		2			
245	457702-3	Pointer		2			
246	326970-8	Lock pin 8		1			
247	234122-6	Compression spring 6		1			
249	457657-2	Lever 25		1			

250	253804-1	Flat washer 6		1			
251	961018-5	Stop ring (EXT) E-5		2			
252	144928-3	Turn base complete		1			
252		INC. 243,253					
253	812X85-6	Caution label		1			
254	326973-2	Rod 12		1			
255	286039-9	Cap		2			
256	326976-6	Center shaft		1			
257	911113-1	Pan head screw M4X10 WR		2			
258	231325-3	Compression spring 6		1			
259	310803-7	Turn stopper		1			
260	347217-7	Lever plate		1			
261	256186-0	Pin 5		1			
262	911231-5	Pan head screw M5X20 W		2			
263	347219-3	Stopper holder		1			
264	327052-9	Lock rod		1			
265	457656-4	Lock lever		1			
266	327051-1	Lock pin 6		1			
267	256158-5	Pin 3		1			
268	231325-3	Compression spring 6		1			
269	347237-1	Cam plate		1			
270	319592-1	Pin holder		1			
271	922231-0	Hex. socket head bolt M5X20 W		2			
272	347216-9	Lock plate		1			
274	326972-4	Rod 6		1			
275	961011-9	Stop ring (EXT) E-4		1			
276	257425-1	Ring 5		2			
277	253194-2	Flat washer 5		2			
278	922231-0	Hex. socket head bolt M5X20 W		2			
279	911113-1	Pan head screw M4X10 WR		1			
280	144656-0	Lever 25 complete		1			
C10	263005-3	Rubber pin 6		1			
281	911008-8	Pan head screw M3X8 WR		1			
282	345272-3	Lock lever plate		1			
283	273015-2	Grip 50A		1			
284	266026-4	Binding head tapping screw 4X12		2			
285	457655-6	Slide plate		1			
286	347412-9	Miter scale plate		1			
287	251546-1	Pan head shoulder screw M5		4			
288	347218-5	Miter lock plate		1			
289	265786-5	Thumb screw M5X16		2			
290	310891-4	Base		1	*		
290-1	310891-4	Base	O	1			
291	421845-7	Foot		4			
292	267195-4	Flat washer 4		4			
293	266026-4	Binding head tapping screw 4X12		4			
294	327315-3	Rod 12		4			
295	961015-1	Stop ring (EXT) E-9		2			
296	266026-4	Binding head tapping screw 4X12		1			

297	266318-1	Hex. socket set screw (flat point) M4X6		1			
299	232249-6	Leaf spring		1			
300	266026-4	Binding head tapping screw 4X12		1			
302	327145-2	Holder 90		1			
303	266213-5	Hex. socket set screw (flat point) M5X12		1			
304	232249-6	Leaf spring		1			
305	922443-5	Hex. socket head bolt M8X25 WR		4			
306	347509-4	Sub fence		2			
307	319815-7	Sub base		2			
308	911113-1	Pan head screw M4X10 WR		4			
309	620L22-2	Controller B	S	1			
310	638A38-7	Lead unit	S	1			
311	652119-7	Pan head screw M2X6	S	6			
A01	122852-0	Dust bag assembly		1			
C10	410602-8	Fastener		1			
A02	126617-2	Vise assembly		1			
A03	762001-3	Triangular rule		1			
A04	783208-8	Hex. wrench 2.5		1			
A05	198900-7	Wireless unit set		1	*		
A05-1	198900-7	Wireless unit set	<	1	*		
A05-2	198900-7	Wireless unit set	<	1	*		
A05-3	198900-7	Wireless unit set	O	1	*		
A05-4	198900-7	Wireless unit set	<	1			
A06	B-67309	TCT BLADE305X60T WOOD EFFICUT		1			
A06	B-67256	TCT BLADE305X60T WOOD EFFICUT		1	*		
A06-1	B-67309	TCT BLADE305X60T WOOD EFFICUT	O	1			
A07	781044-6	Hex. wrench 6		1			
A08	***DC18RD	DC18RD TWO PORT FAST CHARGER		1			
A08		COMPO-PARTS					
A09	197280-8	Battery BL1850B set		2	*		
A09-1	197280-8	Battery BL1850B set	O	2			
A10	450128-8	Battery cover		2			
F02	192628-9	Crown molding stopper set		1			
F03-2	198900-7	Wireless unit set	<	1	*		
F03-3	198900-7	Wireless unit set	O	1	*		
F03-4	198900-7	Wireless unit set	<	1			
F06	191C01-8	Sub base assembly set		1			
F08	198687-1	Stand set		1			
F09	198688-9	Stand set		1			