Model No.DLM465 460MM CORDLESS LAWN MOWER

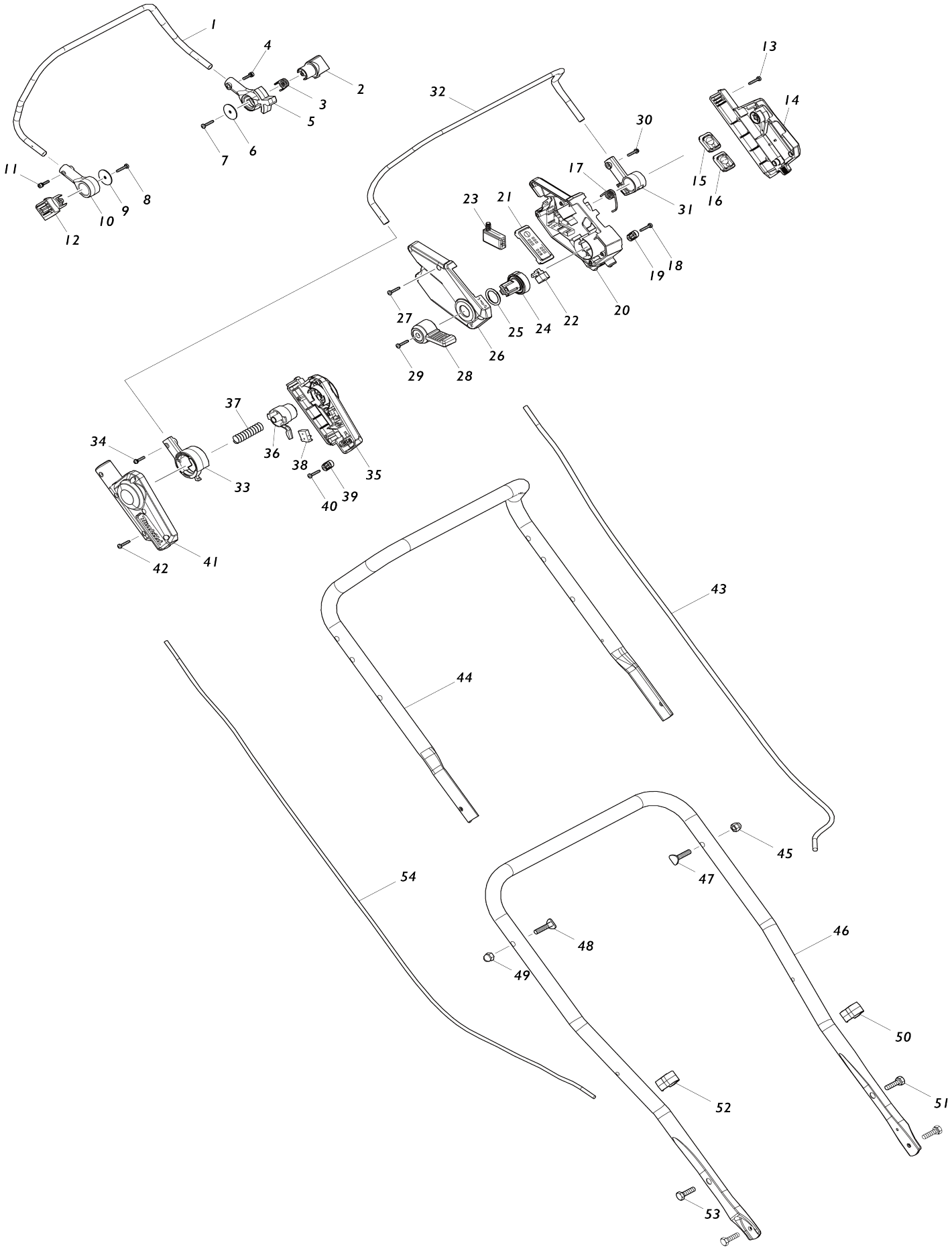

Model No.DLM465 460MM CORDLESS LAWN MOWER

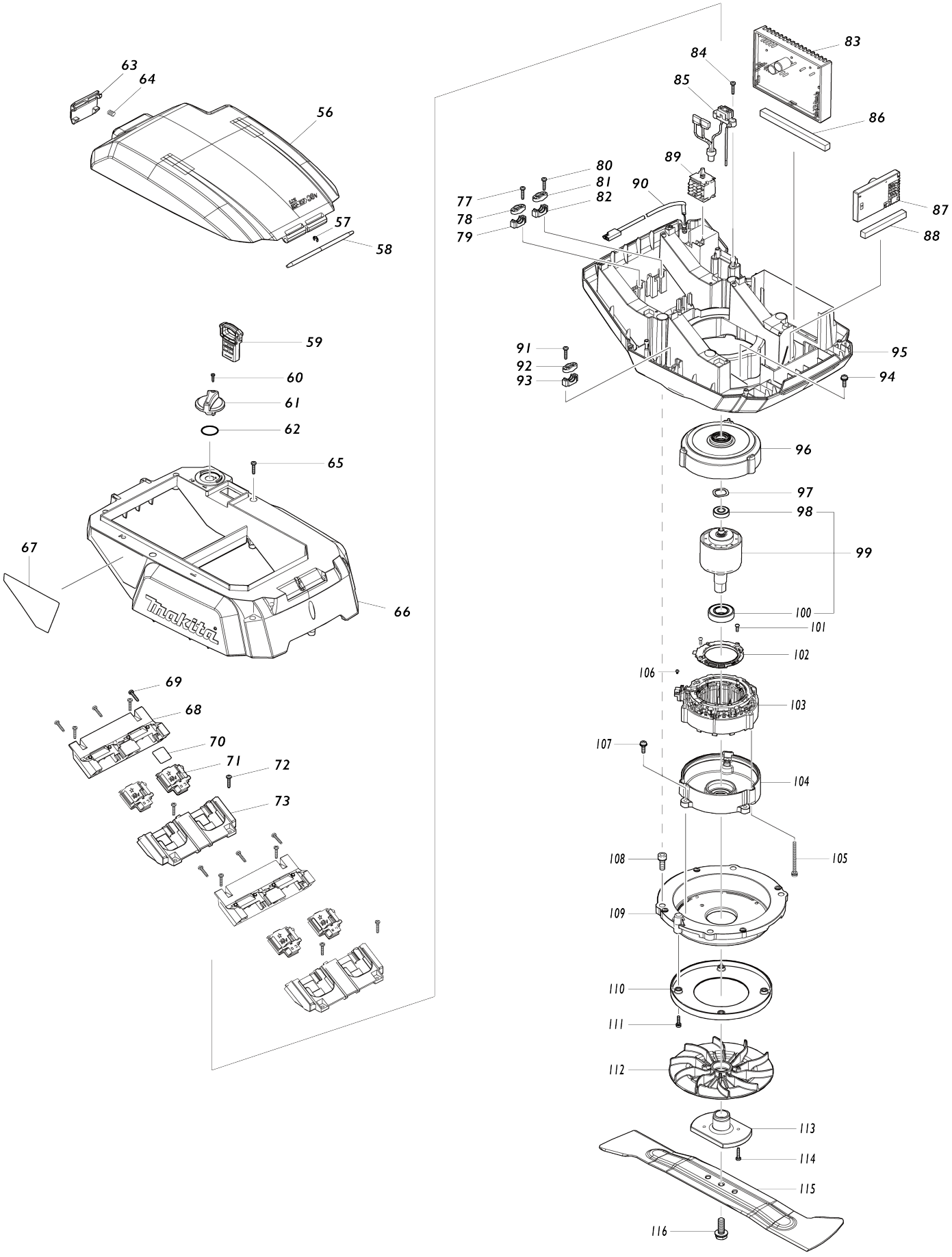

Model No.DLM465 460MM CORDLESS LAWN MOWER

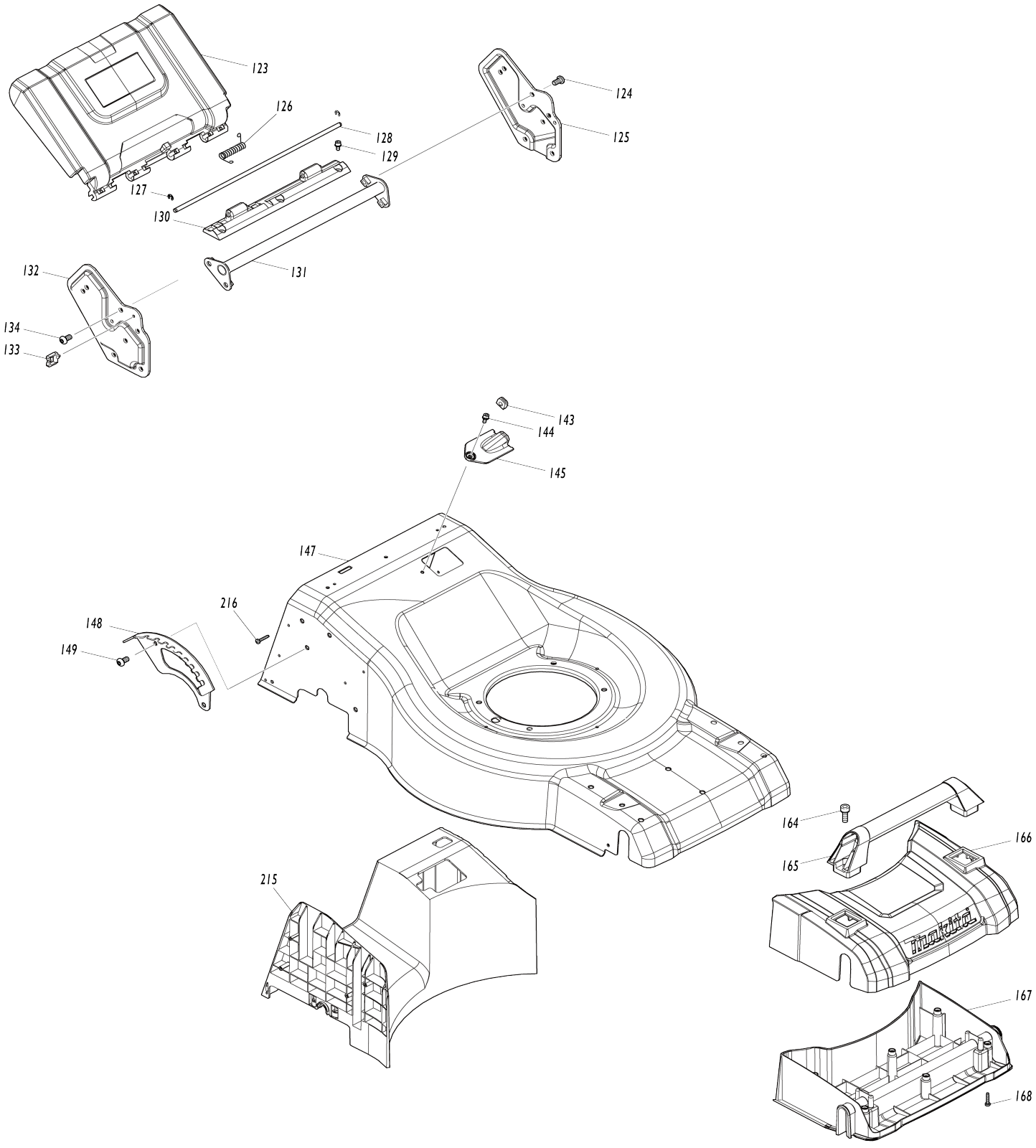

Model No.DLM465 460MM CORDLESS LAWN MOWER

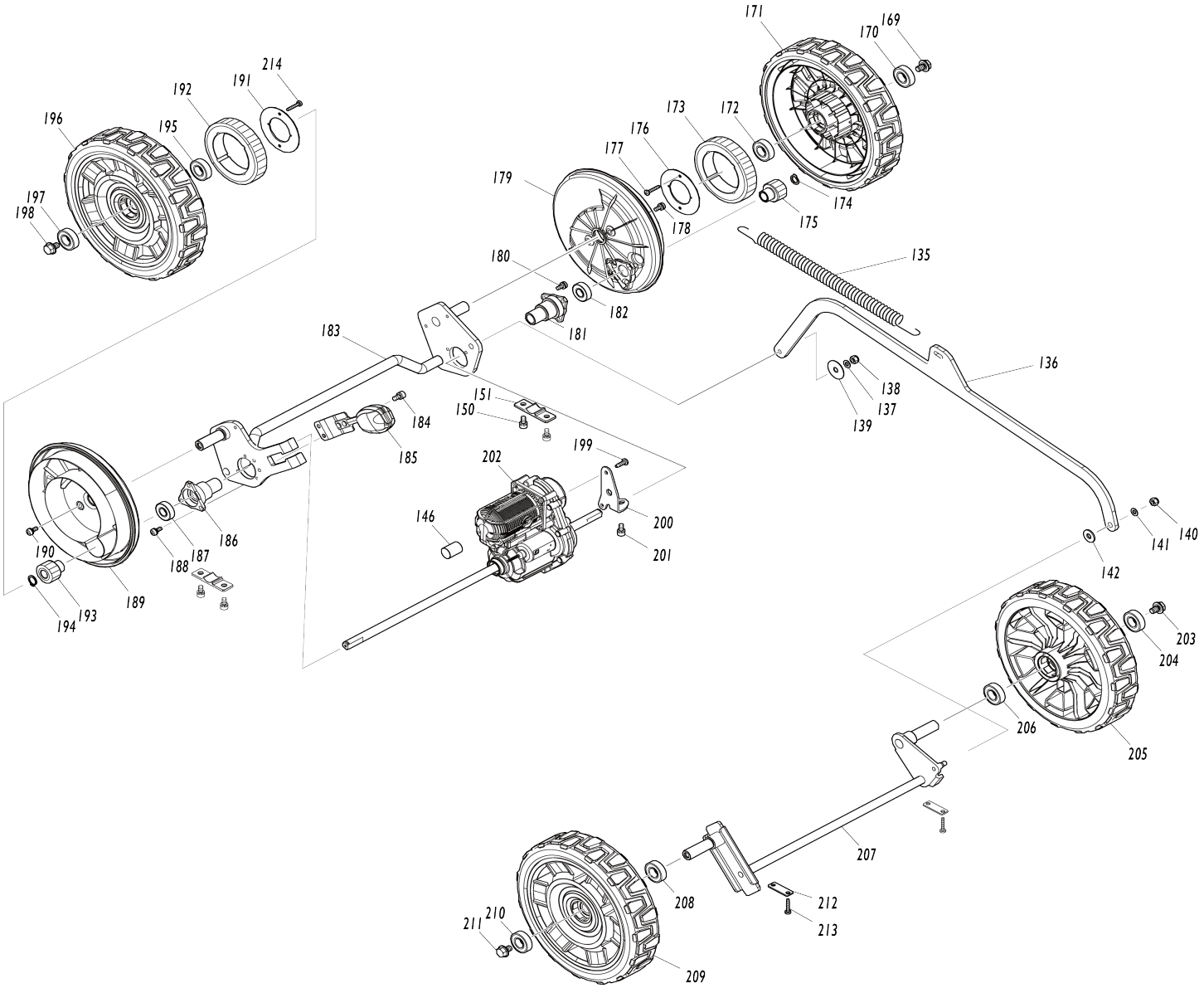

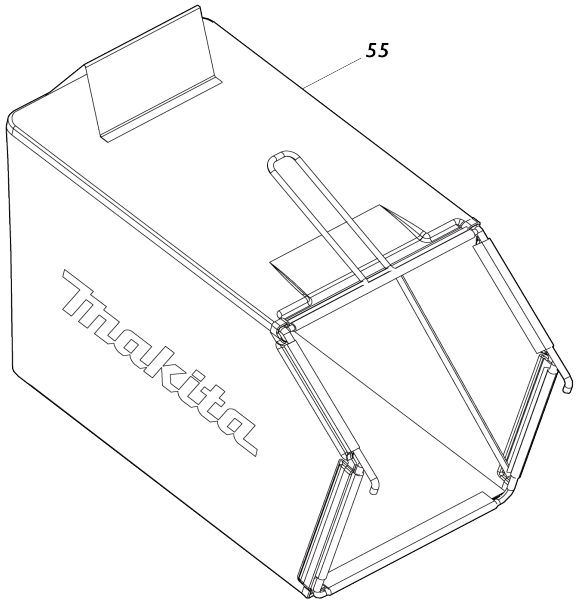

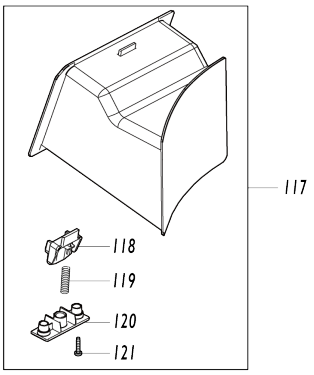

Model No.DLM465 460MM CORDLESS LAWN MOWER

Item No.	Parts No.	Description	Interchangeability	Q'ty	New/ Old	Note1	Note2
001	327425-6	Driving lever		1			
002	459859-6	Driving lever holder		1			
003	232566-4	Torsion spring 12		1			
004	911138-5	Pan head screw M4X20 WR		1			
005	459864-3	Driving lever support L		1			
C10	931102-0	Hex. nut M4		1			
006	267136-0	Flat washer 5		1			
007	266424-2	Binding head tapping screw 4X20		1			
008	266424-2	Binding head tapping screw 4X20		1			
009	267136-0	Flat washer 5		1			
010	459858-8	Driving lever support R		1			
C10	931102-0	Hex. nut M4		1			
011	911138-5	Pan head screw M4X20 WR		1			
012	459859-6	Driving lever holder		1			
013	266424-2	Binding head tapping screw 4X20		6			
014	183N90-3	Switch box set		1			
014		INC. 26					
015	140F09-7	Switch circuit complete		1			
C10	810D46-0	Switch label		1			
016	140F10-2	Switch circuit complete		1			
C10	818A74-1	Switch label		1			
017	232575-3	Torsion spring 12		1			
018	266424-2	Binding head tapping screw 4X20		2			
019	687124-5	Strain relief		1			
020	459860-1	Switch box		1			
021	620C48-0	Indication circuit complete		1			
C10	8007C8-5	Indication label		1			
022	620415-1	Sub controller		1			
023	651083-9	Switch C3XA-1PSPM		1			
024	459866-9	Speed lever holder		1			
025	213897-0	O-ring 26		1			
026	183N90-3	Switch box set		1			
026		INC. 14					
027	266424-2	Binding head tapping screw 4X20		5			
028	459865-1	Speed lever		1			
029	266424-2	Binding head tapping screw 4X20		1			
030	911138-5	Pan head screw M4X20 WR		1			
031	459863-5	Switch lever support L		1			
C10	931102-0	Hex. nut M4		1			
032	327424-8	Switch lever		1			
033	459856-2	Switch lever support R		1			
C10	931102-0	Hex. nut M4		1			
034	911138-5	Pan head screw M4X20 WR		1			

035	183P40-0	Lever box set		1	*		
C10	8007C6-9	Indication label		1	*		
035		INC. 41			*		
035-1	183X73-3	Lever box set	O	1			
C10	8007C6-9	Indication label		1			
035-1		INC. 41					
036	459857-0	Lock off button		1			
037	231227-3	Compression spring 15		1			
038	632E26-0	Switch unit		1			
039	687124-5	Strain relief		1			
040	266424-2	Binding head tapping screw 4X20		2			
041	183P40-0	Lever box set		1	*		
C10	8007C6-9	Indication label		1	*		
041		INC. 35			*		
041-1	183X73-3	Lever box set	O	1			
C10	8007C6-9	Indication label		1			
041-1		INC. 35					
042	266424-2	Binding head tapping screw 4X20		6			
043	699143-9	Power supply cord unit		1			
044	327421-4	Upper handle		1			
045	252278-3	Hex. cap nut M8		1			
046	327423-0	Handle lower		1			
047	265A62-3	Flat head bolt M8X38		1			
048	265A62-3	Flat head bolt M8X38		1			
049	252278-3	Hex. cap nut M8		1			
050	459905-5	Clamp		1			
051	921451-3	Hex. head bolt M8X30 W		2			
052	459905-5	Clamp		1			
053	921451-3	Hex. head bolt M8X30 W		2			
054	699142-1	Power supply cord unit		1			
055	127433-5	Grass catcher assembly		1	*		
055-1	162996-4	Grass catcher	S	1			
056	140S03-7	Battery cover complete		1	*		
C10	890380-0	Caution label		1	*		
056-1	1410K6-7	Battery cover complete	O	1			
C10	8044A3-5	Caution label		1			
057	961018-5	Stop ring (EXT) E-5		1			
058	327536-7	Rod 6		1			
059	643535-4	Key		1			
060	266404-8	Binding head tapping screw 3X14		1			
061	459851-2	Switch lever		1			
062	213896-2	O-ring 24		1			
063	459852-0	Lock lever		1			
064	231037-8	Compression spring 7		1			
065	266424-2	Binding head tapping screw 4X20		7			
066	459847-3	Cowling upper		1			
067	858B54-1	Name plate DLM465		1			
068	183N78-3	Terminal housing set		2			
C10	263005-3	Rubber pin 6		8			

068		INC. 73					
069	266424-2	Binding head tapping screw 4X20		6			
070	858B55-9	Serial No. label DLM465		1			
071	644809-6	Terminal		4			
072	266424-2	Binding head tapping screw 4X20		8			
073	183N78-3	Terminal housing set		2			
C10	263005-3	Rubber pin 6		8			
073		INC. 68					
077	266424-2	Binding head tapping screw 4X20		2			
078	687124-5	Strain relief		1			
079	687051-6	Strain relief		1			
080	266424-2	Binding head tapping screw 4X20		2			
081	687124-5	Strain relief		1			
082	687051-6	Strain relief		1			
083A	620E92-9	Controller		1			
084	266424-2	Binding head tapping screw 4X20		2			
085	632P74-5	Lead unit		1			
086	422529-0	Sponge B		1			
087A	620E95-3	Controller		1			
088	422528-2	Sponge A		1			
089	651444-3	Switch 1703.4703		1			
090	699145-5	Power supply cord unit		1			
091	266424-2	Binding head tapping screw 4X20		2			
092	687124-5	Strain relief		1			
093	687051-6	Strain relief		1			
094	911233-1	Pan head screw M5X20 WR		4			
095	459848-1	Cowling lower		1	*		
095-1	459848-1	Cowling lower	O	1			
096	319869-4	Motor housing upper		1			
097	253455-0	Wave washer 19		1			
098	210141-6	Ball bearing 6000DDW		1	*		
098-1	210332-9	Ball bearing 6000DDW	O	1			
099	519606-8	Rotor assembly		1			
099		INC. 98,100					
100	211387-7	Ball bearing 6004LLU		1			
101	265B29-7	Pan head tapping screw 2X8		2			
102	620B88-2	Controller B		1			
103	629465-3	Stator		1			
104	319870-9	Motor housing lower		1			
105	911691-1	Pan head screw M5X70 WRM		3			
106	652031-1	Pan head screw M3X6		3			
107	911233-1	Pan head screw M5X20 WR		4			
108	922441-9	Hex. socket head bolt M8X25 W		4			
109	319867-8	Motor bracket		1			
110	459853-8	Baffle plate		1			
111	911126-2	Pan head screw M4X16 W		4			
112	240205-2	Fan 170		1			

113	319882-2	Blade support		1			
114	266424-2	Binding head tapping screw 4X20		2			
115	191D51-9	Blade 460 set		1	*		
115-1	191W86-4	Blade 460 set	<	1			
116	265A69-9	Hex. head bolt M10X35 WG		1	*		
116-1	265D72-8	Hex. head bolt M10X35 WG	<	1			
117	127515-3	Mulching plug assembly		1			
117		INC. 118-121					
118	459884-7	Lock lever		1			
119	231401-3	Compression spring 7		1			
120	459885-5	Lock lever support		1			
121	266424-2	Binding head tapping screw 4X20		2			
123	140R95-0	Rear flap complete		1	*		
C10	8007P8-6	Caution label		1	*		
123-1	1410K5-9	Rear flap complete	O	1			
C10	8076C7-2	Caution label		1			
124	265B20-5	Hex. socket button head bolt M8X14		4			
125	347579-3	Handle bracket L		1			
126	233597-6	Torsion spring 8		1			
127	961018-5	Stop ring (EXT) E-5		2			
128	327419-1	Rod 6		1			
129	922213-2	Hex. socket head bolt M5X12 WR		3			
130	459879-0	Rear flap holder plate		1			
131	162693-2	Rear grip		1			
132	347578-5	Handle bracket R		1			
133	451825-9	Clamp		1			
134	265B20-5	Hex. socket button head bolt M8X14		4			
135	232628-8	Tension spring 16		1			
136	347581-6	Connecting rod		1			
137	941151-9	Flat washer 6		1			
138	252014-7	Hex. lock nut M6-10		1			
139	267216-2	Flat washer 8		1			
140	252014-7	Hex. lock nut M6-10		1			
141	941151-9	Flat washer 6		1			
142	253762-1	Flat washer 8		1			
143	422526-6	Grommet		1			
144	922213-2	Hex. socket head bolt M5X12 WR		1			
145	459880-5	Lead cover		1			
146	683A20-1	Tube complete		1			
147	347560-4	Deck		1			
148	347582-4	Height adjust plate		1			
149	265B20-5	Hex. socket button head bolt M8X14		2			
150	922311-2	Hex. socket head bolt M6X12 W		4			
151	313290-9	Rear shaft holder cover		2			
164	922441-9	Hex. socket head bolt M8X25 W		2			
165	459870-8	Front grip		1			
166	459873-2	Front cover		1			
167	459874-0	Deck under cover F		1			

168	266424-2	Binding head tapping screw 4X20		6			
169	265324-3	Hex. head flange bolt M8X12		1			
170	211247-3	Ball bearing 6002DDW		1			
171	127513-7	Rear wheel assembly		1	*		
171-1	122J35-2	REAR WHEEL ASSEMBLY	<	1			
172	211247-3	Ball bearing 6002DDW		1			
173	226941-4	Spur gear 49		1			
174	961052-5	Retaining ring (EXT) S-12		1			
175	226940-6	Spur gear 12		1			
176	347586-6	Gear holder plate		1			
177	266424-2	Binding head tapping screw 4X20		2			
178	911213-7	Pan head screw M5X12 WR		2			
179	459867-7	Wheel cap		1			
180	911213-7	Pan head screw M5X12 WR		3			
181	327426-4	Rear shaft holder		1			
182	210163-6	Ball bearing 6001DDW		2			
183	162691-6	Rear shaft		1			
184	922311-2	Hex. socket head bolt M6X12 W		2			
185	162694-0	Height adjust lever complete		1			
186	327426-4	Rear shaft holder		1			
187	210163-6	Ball bearing 6001DDW		2			
188	911213-7	Pan head screw M5X12 WR		3			
189	459867-7	Wheel cap		1			
190	911213-7	Pan head screw M5X12 WR		2			
191	347586-6	Gear holder plate		1			
192	226941-4	Spur gear 49		1			
193	226940-6	Spur gear 12		1			
194	961052-5	Retaining ring (EXT) S-12		1			
195	211247-3	Ball bearing 6002DDW		1			
196	127513-7	Rear wheel assembly		1	*		
196-1	122J35-2	REAR WHEEL ASSEMBLY	<	1			
197	211247-3	Ball bearing 6002DDW		1			
198	265324-3	Hex. head flange bolt M8X12		1			
199	266388-0	Binding head tapping screw 5X16		2			
200	347585-8	Bracket		1			
201	922311-2	Hex. socket head bolt M6X12 W		1			
202	127509-8	Drive unit assembly		1			
203	265324-3	Hex. head flange bolt M8X12		1			
204	211247-3	Ball bearing 6002DDW		1			
205	127514-5	Front wheel assembly		1			
206	211247-3	Ball bearing 6002DDW		1			
207	162690-8	Front shaft		1			
208	211247-3	Ball bearing 6002DDW		1			
209	127514-5	Front wheel assembly		1			
210	211247-3	Ball bearing 6002DDW		1			
211	265324-3	Hex. head flange bolt M8X12		1			
212	341462-6	Plate		2			
213	266424-2	Binding head tapping screw 4X20		4			
214	266424-2	Binding head tapping screw 4X2		2			

		0					
215	459875-8	Deck under cover R		1			
216	266424-2	Binding head tapping screw 4X20		10			
217	327879-7	Grass catcher bracket	S	1			
A01	327589-6	Rod 6		1			
A02	782210-8	Box wrench		1			
A03	782212-4	Box wrench 13		1			
A05A	***DC18RD	DC18RD TWO PORT FAST CHARGER		1			
A05A		COMPO-PARTS					
A06A	197280-8	Battery BL1850B set		4			
B01	122F61-7	Grass catcher assembly		1			
B01		INC. 55,217					
E01	800A17-7	Sound 94DB label		1	*		
E01-1	819V88-9	Sound 95dB label	<	1			
F01	191D47-0	Swing back blade 460 set		1			
F02	191D49-6	Swing back blade 460 complete set		1			
F03	191D51-9	Blade 460 set		1			