Model No.DLM330 330MM CORDLESS LAWN MOWER

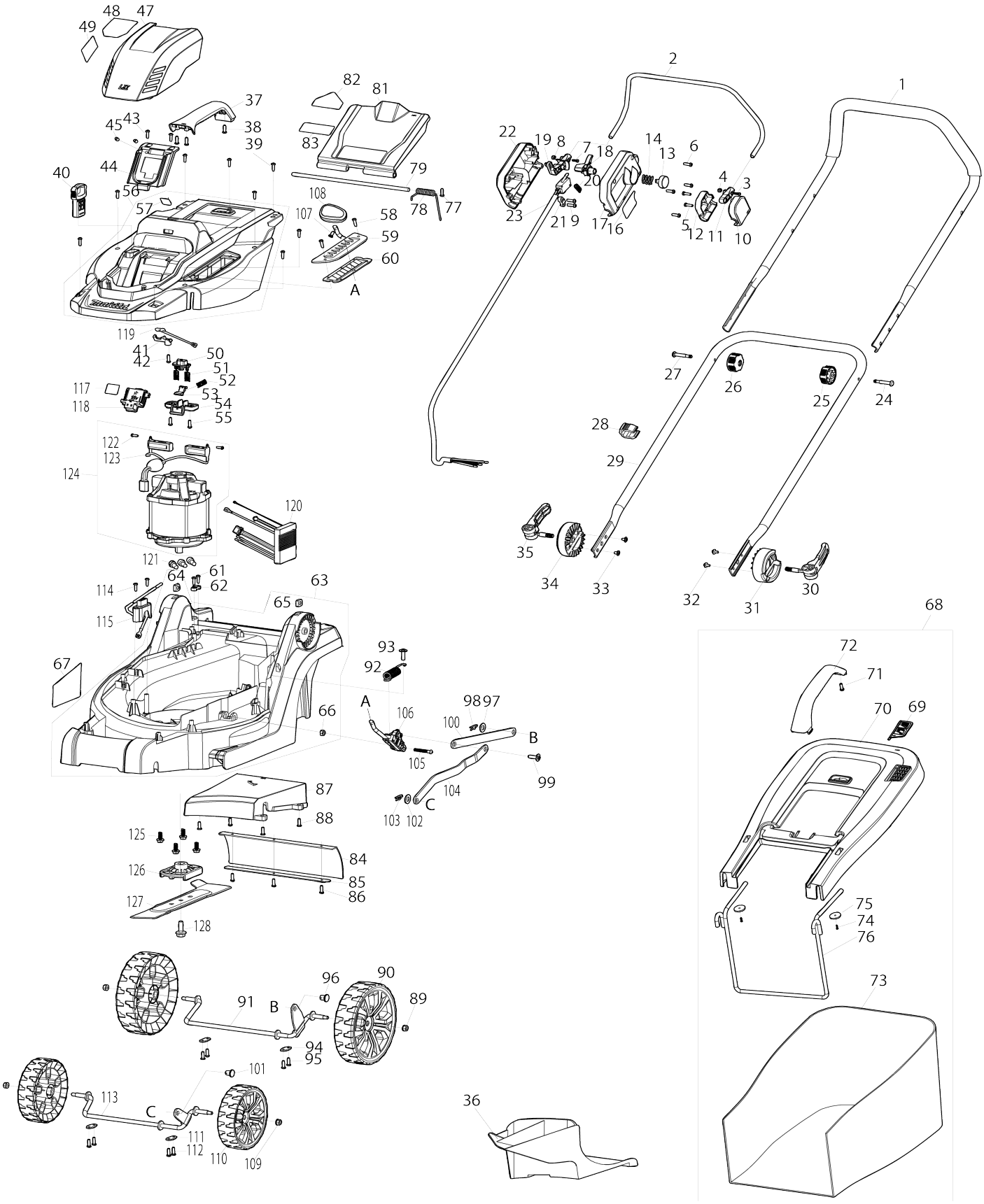

Model No.DLM330 330MM CORDLESS LAWN MOWER

Item No.	Parts No.	Description	Interchangeability	Q'ty	New/ Old	Note1	Note2
001	GB00000136	UPPER HANDLE		1			
002	GB00000044	SWITCH LEVER		1			
003	GB00000045	PAN HEAD SCREW M4X18		1			
004	GB00000046	HEX LOCK NUT M4		1			
005	GB00000003	TAPPING SCREW ST4.2X15		2			
006	GB00000003	TAPPING SCREW ST4.2X15		4			
007	GB00000045	PAN HEAD SCREW M4X18		1			
008	GB00000046	HEX LOCK NUT M4		1			
009	GB00000003	TAPPING SCREW ST4.2X15		2			
010	GB00000047	SWITCH LEVER HINGE BOX L		1			
011	GB00000048	SWITCH LEVER END CAP L		1			
012	GB00000049	SWITCH LEVER HINGE BOX R		1			
013	GB00000050	SWITCH LINK BUTTON		1			
014	GB00000051	COMPRESSION SPRING		1			
016	GB00000153	SWITCH OPERATION LABEL		1			
017	GB00000053	SWITCH BOX COVER L		1			
018	GB00000054	SWITCH CONTROL LINK		1			
019	GB00000055	SWITCH LEVER END CAP R		1			
020	GB00000056	TENSION SPRING		1			
021	GB00000057	CORD CLAMP		1			
022	GB00000058	SWITCH BOX COVER R		1			
023	GB00000138	SWITCH&CORD ASSY		1			
024	GB00000060	SQUARE NECK BOLT M6X42		1			
025	GB00000061	KNOB NUT M6		1			
026	GB00000061	KNOB NUT M6		1			
027	GB00000060	SQUARE NECK BOLT M6X42		1			
028	GB00000062	CORD CLIP		1			
029	GB00000063	LOWER HANDLE		1			
030	GB00000064	TENSION LEVER ASSY		1			
031	GB00000065	HANDLE FIX BLOCK		1			
032	GB00000066	TRAS HEAD TAPPING SCREW 4X8		2			
033	GB00000066	TRAS HEAD TAPPING SCREW 4X8		2			
034	GB00000065	HANDLE FIX BLOCK		1			
035	GB00000064	TENSION LEVER ASSY		1			
036	GB00000067	MULCHING PLUG		1			
037	GB00000068	CARRYNG HANDLE		1			
038	GB00000003	TAPPING SCREW ST4.2X15		3			
039	GB00000003	TAPPING SCREW ST4.2X15		8			
040	GB00000069	KEY		1			
041	GB00000070	INDICATOR UNIT MOUNT		1			
042	GB00000003	TAPPING SCREW ST4.2X15		1			
043	GB00000003	TAPPING SCREW ST4.2X15		2	*		
043-1	GB00000158	FLANGED TAPPING SCREW ST4.2 X15	>	2			
044	GB00000071	BATTERY HOLDER		1			
045	GB00000072	RUBBER PIN 5.5X8.5		2			
047	GB00000074	BATTERY HOOD		1			
048	GB00000140	330MM LABEL		1			

050	GB00000077	BATTERY HOOD LOCK BUTTON		1			
051	GB00000078	COMPRESSION SPRING		2			
052	GB00000078	COMPRESSION SPRING		1			
053	GB00000079	BATTERY HOOD RATCHI		1			
054	GB00000080	BATTERY HOOD RATCHI FIX PLAT E		1			
055	GB00000003	TAPPING SCREW ST4.2X15		2			
056	GB00000081	UPPER HOUSING ASSEMBLY		1			
056		INC. 57					
057	GB00000082	BATTERY INDICATOR LABEL		1			
058	GB00000083	TAPPING SCREW ST4.2X15 SILVE R		2			
059	GB00000084	HEIGHT ADJUST GUIDE PLATE		1			
060	GB00000085	RUBBER SHEET FOR GUIDE PLAT E		1			
061	GB00000003	TAPPING SCREW ST4.2X15		2			
062	GB00000057	CORD CLAMP		1			
063	GB00000086	DECK ASSEMBLY		1			
063		INC. 64-66					
064	GB00000087	SQUARE NUT M8		1			
065	GB00000087	SQUARE NUT M8		1			
066	GB00000088	HEX LOCK NUT M6		1			
067	GB00000141	NAMEPLATE DLM330		1			
068	GB00000151	GRASS CATCHER ASSY		1			
068		INC. 69-76					
069	GB00000090	GRASS LEVEL INDICATOR PLATE		1			
070	GB00000091	GRASS CATCHER UPPER PLATE		1			
071	GB00000003	TAPPING SCREW ST4.2X15		1			
072	GB00000092	GRASS CATCHER GRIP		1			
073	GB00000142	GRASS CATCHER LOWER PLATE A SSY		1			
074	GB00000003	TAPPING SCREW ST4.2X15		2			
075	GB00000094	FLAT WASHER 4.5X20X1.4		2			
076	GB00000095	GRASS CATCHER FLAME		1			
077	GB00000003	TAPPING SCREW ST4.2X15		1			
078	GB00000096	REAR FLAP TORSION SPRING		1			
079	GB00000097	REAR FLAP HINGE ROD		1			
081	GB00000099	REAR FLAP		1			
083	GB00000144	WARNING SOUND LABEL		1			
087	GB00000104	GRASS OUTLET LOWER PLATE		1			
088	GB00000003	TAPPING SCREW ST4.2X15		4			
089	GB00000105	HEX FLANGED+F130 LOCK NUT M6		2			
090	GB00000106	WHEEL 180MM		2			
091	GB00000107	REAR AXLE		1			
092	GB00000108	HEIGHT ADJUST TENSION SPRIN G		1			
093	GB00000109	TRUSS HEAD TAPPING SCREW 5X 18		1			
094	GB00000110	AXLE FIX PLATE		2			
095	GB00000003	TAPPING SCREW ST4.2X15		4			
096	GB00000111	STEPPED PIN 10-12		1			
097	GB00000112	FLAT WASHER 10		1			

098	GB00000113	R-PIN 10		1	*		
098-1	GB00000159	R-PIN 10	>	1			
099	GB00000109	TRUSS HEAD TAPPING SCREW 5X 18		1			
100	GB00000114	HEGHT ADJUST LINK ROD REAR		1			
101	GB00000111	STEPPED PIN 10-12		1			
102	GB00000112	FLAT WASHER 10		1			
103	GB00000113	R-PIN 10		1	*		
103-1	GB00000159	R-PIN 10	>	1			
104	GB00000115	HEIGHT ADJUST LINK ROD FRON T		1			
105	GB00000116	PAN HEAD SCREW 6X30		1			
106	GB00000117	HEIGHT ADJUST LEVER ASSY		1			
107	GB00000118	FLAT HEAD SCREW M4X10		1			
108	GB00000119	GRIP FOR HEIGHT ADJUSTMENT		1			
109	GB00000105	HEX FLANGED+F130 LOCK NUT M6		2			
110	GB00000120	WHEEL 138MM		2			
111	GB00000110	AXLE FIX PLATE		2			
112	GB00000003	TAPPING SCREW ST4.2X15		4			
113	GB00000121	FRONT AXLE		1			
114	GB00000003	TAPPING SCREW ST4.2X15		2			
115	GB00000122	KEY SOCKET		1			
117	GB00000145	SERIAL NO. LABEL DLM330		1			
118	GB00000124	TERMINAL		1	*		
118-1	644809-6	TERMINAL	O	1	*		
118-2	GB00000206	TERMINAL	O	1			
119	GB00000125	INDICATOR UNIT		1			
120	GB00000126	CONTROLLER		1			
121	GB00000127	CLOSED END SPLICE 5.5-SD		3			
122	GB00000128	TAPPING SCREW ST3.0X8		2			
123	GB00000147	CARBON BRUSH ASSY WITH COI L		1			
124	GB00000148	MOTOR ASSY WITH CHOKE COIL		1			
124		INC. 122,123					
125	GB00000131	HEX FLANGED BOLT M8X18 W/B OND		4			
126	GB00000132	BLADE SUPPORT		1			
127	GB00000042	BLADE 330		1			
128	GB00000133	BLADE HEX BOLT M8X28 WITH W R		1			
A01	GB00000134	WRENCH 13		1			