Model No.DKP181 82MM CORDLESS PLANER

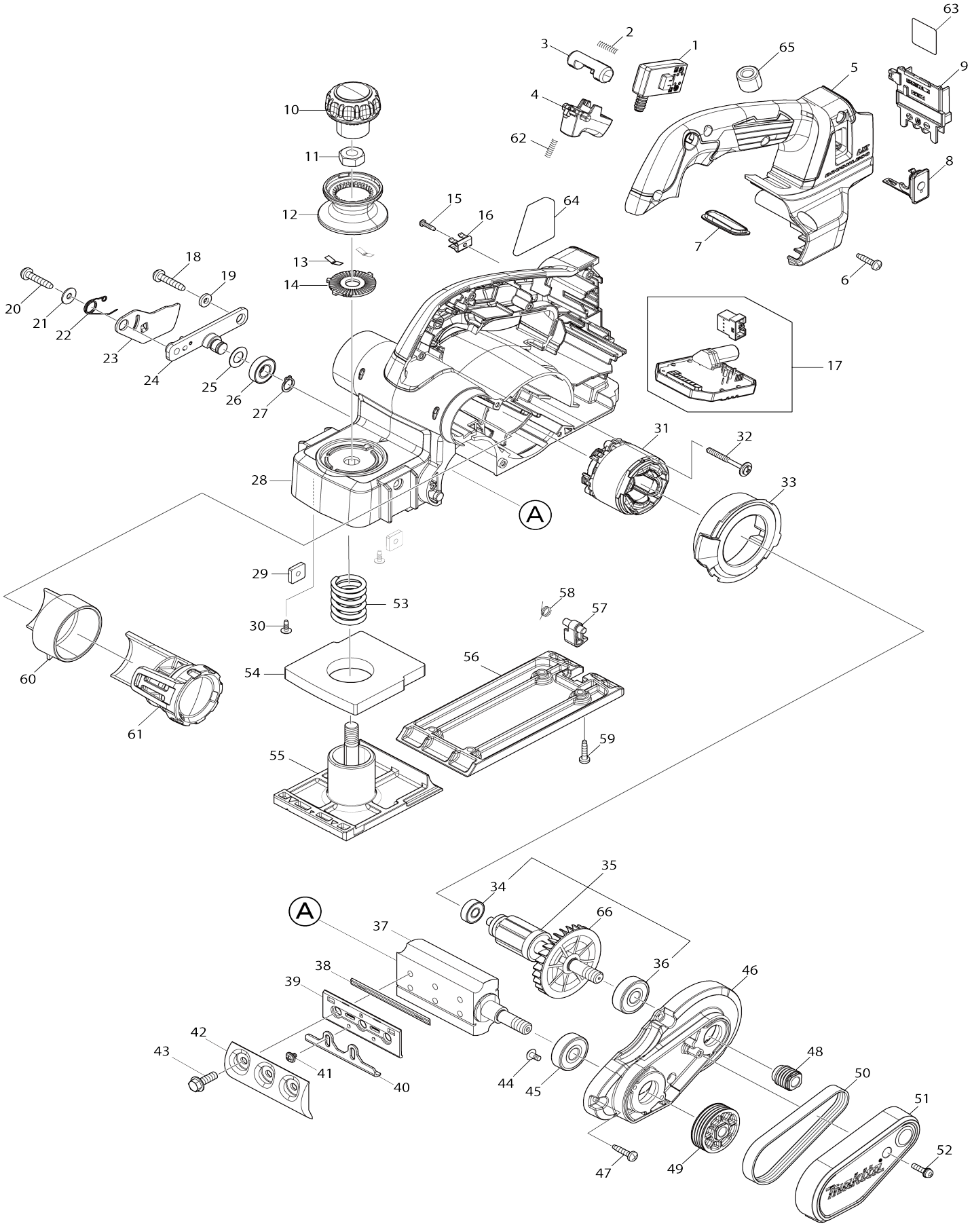

Model No.DKP181 82MM CORDLESS PLANER

Item No.	Parts No.	Description	Interchangeability	Q'ty	New/ Old	Note1	Note2
001	651083-9	Switch C3XA-1PSPM		1			
002	231433-0	Compression spring 4		1			
003	419704-7	Lock off button		1			
004	457432-6	Switch lever		1			
005	140N52-4	Handle cover complete		1	*		
C10	263005-3	Rubber pin 6		1	*		
005-1	140V49-1	Handle cover complete	<	1	*		
C10	263005-3	Rubber pin 6		1	*		
005-2	140V73-4	Handle cover complete	O	1	*		
C10	263005-3	Rubber pin 6		1	*		
005-3	136568-1	Handle cover assembly	O	1			
C10	263005-3	Rubber pin 6		1			
006	265995-6	Binding head tapping screw 4X18		6			
007	142948-1	Indication plate complete		1			
008	140F99-0	Cap complete		1			
C10	213218-6	O-ring 16		1	*		
C11	213A05-9	O-ring 16	O	1			
C20	818H07-8	Cap label		1			
009	643874-2	Terminal		1			
010	451328-3	Knob cover		1			
011	252276-7	Hex. nut M10		1			
012	459894-4	Knob		1			
013	232185-6	Leaf spring		2			
014	347588-2	Cam plate		1			
015	266556-5	Pan head tapping screw 3X12		1			
016	232570-3	Leaf spring		1			
017	620B79-3	Controller		1	*		
017-1	620J24-6	Controller	S	1			
018	266041-8	Binding head tapping screw 5X25		1			
019	267012-8	Flat washer 5		1			
020	266041-8	Binding head tapping screw 5X25		1			
021	253194-2	Flat washer 5		1			
022	233521-9	Torsion spring 10		1			
023	345765-0	Drum cover		1			
024	158184-9	Drum holder complete		1	*		
024-1	141T27-2	Drum holder complete	O	1			
025	253758-2	Flat washer 10		1			
026	210057-5	Ball bearing 6900LLB		1			
027	961006-2	Retaining ring (EXT) S-10		1			
028	140N51-6	Main frame complete		1	*		
C10	263005-3	Rubber pin 6		1	*		
028-1	136534-8	Main frame assembly	O	1			
C10	263005-3	Rubber pin 6		1			
029	264002-2	Square nut M5		2			
030	265A77-0	Tapping screw 3X10		2			

031	629453-0	Stator		1	*		
031-1	629B61-9	Stator	S	1			
032	265679-6	Tapping screw 4X40		2			
033	459891-0	Baffle plate		1			
034	210034-7	Ball bearing 607LLB		1			
035	519590-7	Rotor assembly		1	*		
035		INC. 34,36,66			*		
035-1	519742-0	Rotor assembly	O	1			
035-1		INC. 34,36,66					
036	211087-9	Ball bearing 6200DDW		1			
037	158156-4	Drum complete		1			
038	A-82921	T.C.T. MINI PLANER BLADE		1	*		
038-1	D-07945	82MM TCT MINI PLANER BLADE	O	1			
039	343433-9	Set plate		2			
040	345644-2	Adjust plate		2			
041	251246-3	Pan head screw M4X5		4			
042	187676-1	Drum plate set		1			
043	251609-3	Hex. head flange bolt M6X17		6			
044	251291-8	Truss head screw M4X8		2			
045	211087-9	Ball bearing 6200DDW		1			
046	140N50-8	Bracket complete		1			
C10	263002-9	Rubber pin 4		1			
047	265995-6	Binding head tapping screw 4X18		4			
048	222193-5	V-pulley 4-17L		1			
049	222194-3	V-pulley 4-39.5		1			
050	225071-8	Poly V-belt 4-241		1			
051	459893-6	Belt cover		1			
052	911133-5	Pan head screw M4X18 WR		1			
053	231004-3	Compression spring 18		1	*		
053-1	233395-8	Compression spring 18	O	1			
054	422531-3	Rubber packing		1			
055	319872-5	Front base		1			
056	318499-8	Base		1	*		
056-1	312C89-7	Base	O	1			
057	451392-4	Foot		1	*		
057-1	413L64-1	Foot	<	1			
058	231698-4	Torsion spring 7		1			
059	265995-6	Binding head tapping screw 4X18		4			
060	459892-8	Nozzle		1			
061	125353-7	Duct assembly		1			
062	231433-0	Compression spring 4		1			
063	856J96-7	Serial No. label DKP181		1			
064	856J88-6	Name plate DKP181		1			
065	688163-8	Line filter		1	*		
066	240079-1	Fan 62		1			
067	620K37-3	Controller B	S	1			
068	652119-7	Pan head screw M2X6	S	6			
A01	122785-9	Guide rule assembly		1			
C10	213009-5	O-ring 4		1			
C20	251871-0	Thumb screw M5X10		1			

C30	251878-6	Thumb screw M5X20		1			
C40	253807-5	Flat washer 5		2			
C50	345768-4	Guide holder		1			
A02	123062-2	Blade gauge assembly		1	*		
C10	911228-4	Pan head screw M5X18 WR		2	*		
C20	411086-3	Gauge plate		1	*		
A02-1	127669-6	Blade gauge assembly	O	1	*		
C10	911228-4	Pan head screw M5X18 WR		2	*		
C20	418465-6	Gauge plate		1	*		
A02-2	122695-0	Blade gauge assembly	O	1			
C10	265131-4	Pan head screw M5X18		2			
C20	418465-6	Gauge plate		1			
A03	782209-3	Box wrench 9		1			
A04	251878-6	Thumb screw M5X20		1			
A05	253807-5	Flat washer 5		1			
A06	342390-8	Depth guide		1			
A08B	198900-7	Wireless unit set		1	*		
A08-1B	198900-7	Wireless unit set	<	1	*		
A08-2B	198900-7	Wireless unit set	<	1	*		
A08-3B	198900-7	Wireless unit set	O	1	*		
A08-4B	198900-7	Wireless unit set	<	1			
A11	442198-1	Anti corrosion paper		1	*		
F05	191C20-4	Elbow set		1			
F06	191C21-2	Dust bag assembly set		1			
F07	193540-6	Set plate set		1			
F08	193540-6	Set plate set		1			
F10-2	198900-7	Wireless unit set	<	1	*		
F10-3	198900-7	Wireless unit set	O	1	*		
F10-4	198900-7	Wireless unit set	<	1			