Model No.DJS200 Cordless Metal Shear

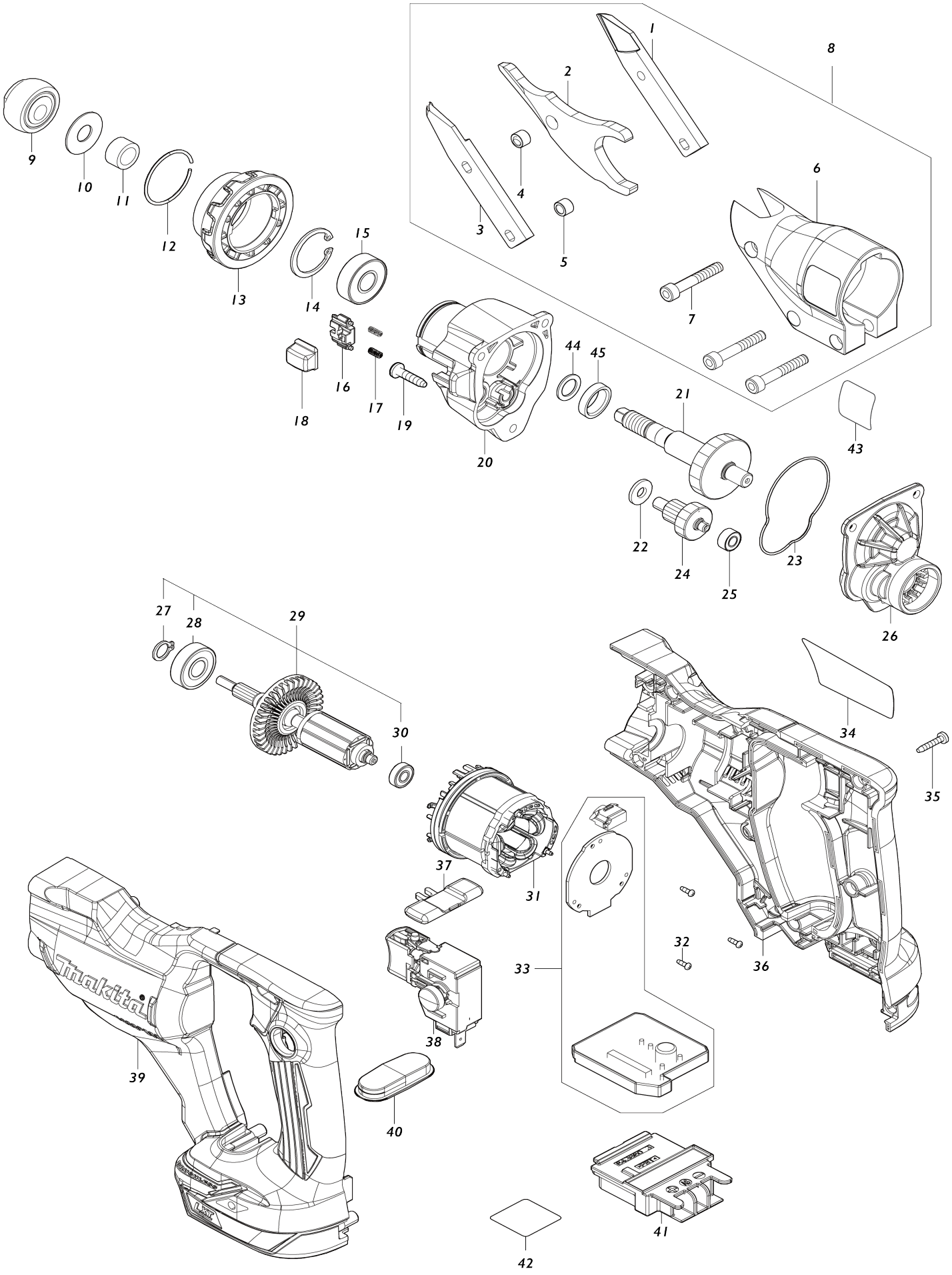

Model No.DJS200 Cordless Metal Shear

Item No.	Parts No.	Description	Interchangeability	Q'ty	New/ Old	Note1	Note2
001-1	725092-5	Side blade R		1	*		
001-2	792742-7	Side blade R (1 pc)	O	1			
002	725255-3	Center blade		1			
003-1	725093-3	Side blade L		1	*		
003-2	792743-5	Side blade L (1 pc)	O	1			
004	327518-9	Pivot bush		1			
005-1	257705-5	Sleeve 5		1			
006	140R34-0	Cutting head complete		1	*		
006-1	140R34-0	Cutting head complete	O	1			
007	265A91-6	Shear head screw 10-32X1 1/4"		3	*		
007-1	265A91-6	Shear head screw 10-32X1 1/4"	O	3			
008	127486-4	Shear head assembly		1	*		
008		INC. 1-7			*		
008-1	127486-4	Shear head assembly	O	1			
008-1		INC. 1-7					
009	127485-6	Bearing assembly		1			
010	267223-5	Flat washer 10		1			
011	257428-5	Sleeve 10		1			
012	233929-7	Ring spring 29		1			
013	310995-2	Change ring		1			
014	962105-3	Retaining ring (INT) R-26		1			
015	210059-1	Ball bearing 6000DDW		1			
016	310993-6	Lever		1			
017	232390-5	Compression spring 2		2			
018	310994-4	Button		1			
019	265A48-7	Tapping screw 4X18		3			
020	140R40-5	Gear housing complete		1			
021	140R42-1	Gear complete		1			
022	267100-1	Flat washer 6		1			
023	424928-2	Seal ring		1			
024	221478-6	Gear complete 9-23		1			
025	210003-8	Ball bearing 685ZZ		1			
026	140R41-3	Gear housing cover complete		1			
027	961005-4	Retaining ring (EXT) S-9		1			
028-1	211491-2	Ball bearing 609DDW		1			
029	519424-4	Rotor assembly		1			
029		INC. 27,28,30					
030	210039-7	Ball bearing 695DDW		1			
031	629487-3	Stator		1			
032	266490-9	Pan head tapping screw 2X6		3			
033	620B89-0	Controller		1			
034	857A78-8	Name plate DJS200		1			
035	266130-9	Binding head tapping screw 3X16		8			
036	183P52-3	Housing set		1			
C10	263005-3	Rubber pin 6		2			
C20	252126-6	Hex. lock nut M4-7		2			
036		INC. 39					

037	412330-1	Change lever		1			
038	651088-9	Switch C3JW-4B-1L		1			
039	183P52-3	Housing set		1			
C10	263005-3	Rubber pin 6		2			
C20	252126-6	Hex. lock nut M4-7		2			
039		INC. 36					
040	412332-7	Switch plate		1			
041	643860-3	Terminal		1			
042	857A82-7	Serial No. label DJS200		1			
043	8012T3-7	Indication label		1			
044	267047-9	Flat washer 10		1			
045	257852-2	Ring 10		1			
A01	266622-8	Truss head screw M4X12		1			
A02	346317-0	Hook		1			
A03	783215-1	Hex. wrench 5/32"		1			

Please state Parts No. when your order.

Print Date 08/10/2026