Model No.DHR280 Cordless Combination Hammer

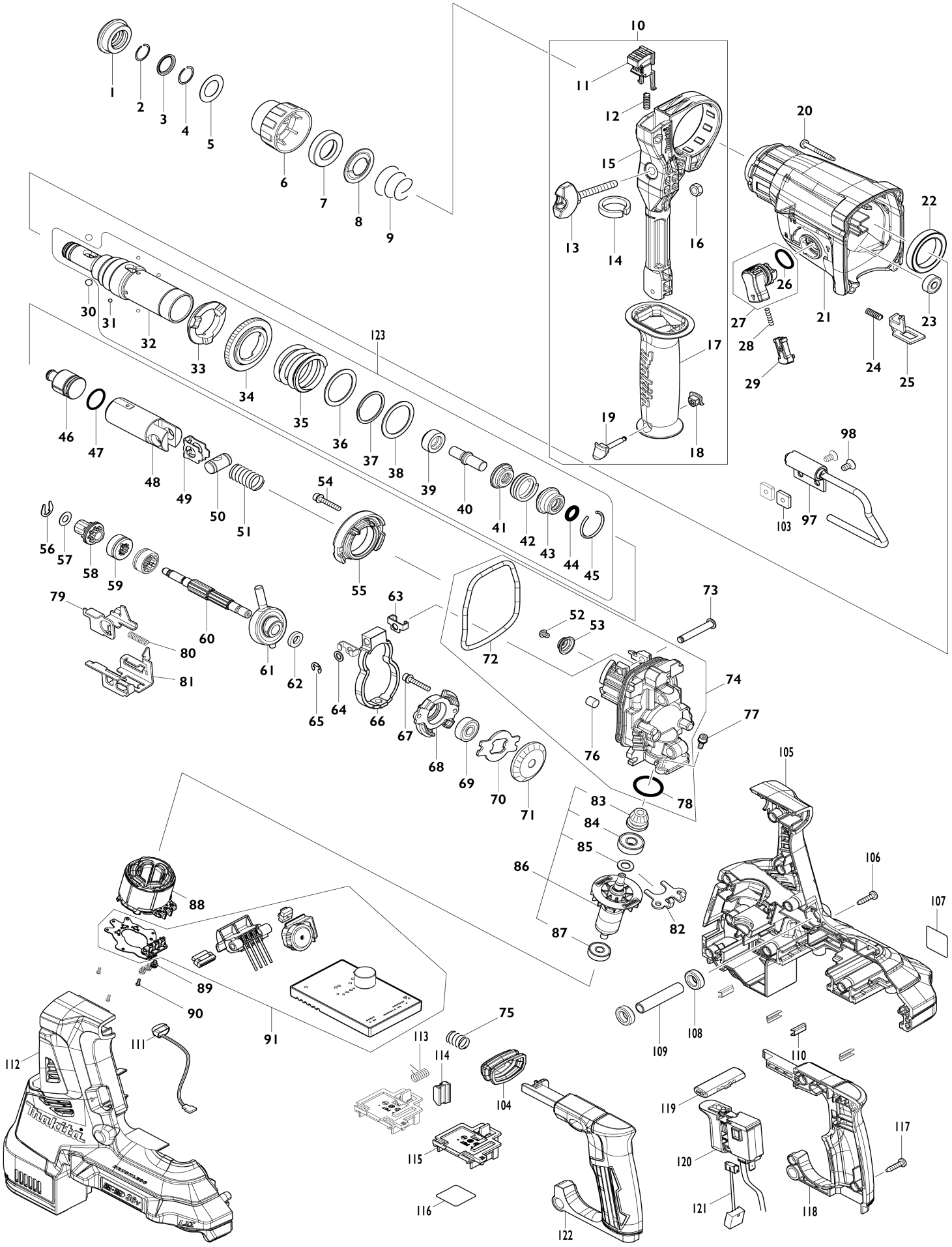

Model No.DHR280 Cordless Combination Hammer

Item No.	Parts No.	Description	Interchangeability	Q'ty	New/ Old	Note1	Note2
001	286288-8	Cap 35		1			
002	233989-9	Ring spring 14		1			
003	346834-0	Washer 16		1			
004	233992-0	Ring spring 15		1			
005	267114-0	Flat washer 17		1			
006	455393-4	Chuck cover		1			
007	325813-1	Ring 21		1			
008	346177-0	Guide washer		1			
009	233916-6	Conical compression spring 21-29		1			
010	126882-3	Grip assembly		1			
010		INC. 11-19					
011	144959-2	Lock button complete		1			
012	233360-7	Compression spring 4		1			
013	265625-9	Thumb screw M6X50		1			
014	422258-5	Sponge sheet		1			
015	458355-1	Side handle base		1			
016	931302-2	Hex. nut M6		1			
017	458357-7	Grip 36		1			
018	422255-1	Cap		1			
019	161838-9	Fix pin		1			
020	266351-3	Binding head tapping screw 4X35		4			
021	144965-7	Gear housing complete		1			
C10	213345-9	Oil seal 25		1			
C20	331890-3	Cup sleeve		1			
022	211294-4	Ball bearing 6806LLU		1			
023	211012-0	Ball bearing 606ZZ		1			
024	233360-7	Compression spring 4		1			
025	347228-2	Lock plate		1			
026	213278-8	O-ring 17		1			
027	135961-6	Change lever assembly		1			
027		INC. 26					
028	234264-6	Compression spring 3		1			
029	457709-9	Lock button		1			
030	216022-2	Steel ball 7.0		2			
031	216019-1	Steel ball 3		4	*		
031-1	216068-8	Steel ball 3	<	4			
032	142972-4	Tool holder complete		1			
C10	213344-1	Oil seal 9		1			
033	332139-4	Driving flange		1			
034	227360-7	Spur gear 51		1			
035	234148-8	Compression spring 31		1			
036	267153-0	Flat washer 30		1			
037	257932-4	Spiro lock washer 30		1			
038	267153-0	Flat washer 30		1			
039	325783-4	Sleeve 9B		1			
040	325789-2	Impact bolt A		1			

041	325792-3	Washer 10		1			
042	234149-6	Compression spring 20		1			
043	325793-1	O-ring case B		1			
044	213073-6	O-ring 9		1			
045	233979-2	Ring spring 28		1			
046	325784-2	Striker		1			
047	213258-4	O-ring 17.5		1			
048	327079-9	Piston cylinder		1			
049	346036-8	Guide plate		1			
050	324215-8	Piston joint		1			
051	232449-8	Compression spring 14		1			
052	265627-5	Hex. socket button head bolt M4 X6		1			
053	347344-0	Spring guide		1			
054	922148-7	Hex. socket head bolt M4X25 WR		2			
055	144960-7	Inner support complete		1			
056	257336-0	Stop ring (EXT) U-6		1			
057	253186-1	Flat washer 7		1			
058	226170-9	Spur gear 10		1			
059	332125-5	Clutch cam		2	*		
059-1	310678-4	Clutch cam	O	2			
060	327078-1	Cam shaft		1			
061	219030-2	Swash bearing 10		1			
062	257321-3	Ring 8		1			
063	346538-4	Weight holder guide		2			
064	253077-6	Flat washer 6		1			
065	961018-5	Stop ring (EXT) E-5		1			
066	310869-7	Counter weight		1			
067	922148-7	Hex. socket head bolt M4X25 WR		2			
068	319674-9	Bearing box		1			
069	211032-4	Ball bearing 608ZZ		1			
070	347343-2	Bearing retainer B		1			
071	221599-4	Spiral bevel gear 32		1			
072	213850-6	O-ring 74		1			
073	256536-9	Flat fillister HD. pin 6		1			
074	135962-4	Inner housing assembly		1			
074		INC. 52,53,72,76,78					
075	232436-7	Compression spring 10		1			
076	443153-6	Felt		1			
077	922118-6	Hex. socket head bolt M4X12 WR		2			
078	213008-7	O-ring 22.4		1			
079	347230-5	Change plate B		1			
080	234343-0	Compression spring 5		1			
081	347229-0	Change plate A		1			
082	346536-8	Bearing retainer A		1			
083	144964-9	Spiral bevel gear 11 complete		1			
084	210024-0	Ball bearing 608 LLU		1			
085	253835-0	Flat washer 8		1			
086	519513-5	Rotor assembly		1	*		
086		INC. 83-85,87			*		
086-1	619841-9	Rotor	O	1			
086-1		INC. 83-85,87					

087	210022-4	Ball bearing 626DDW		1			
088	629340-3	Stator		1			
089	652069-6	Flat head screw M3X6		3			
090	266490-9	Pan head tapping screw 2X6		3			
091	620815-5	Controller		1			
097	135963-2	Hook assembly		1			
098	912207-5	Countersunk head screw M5X10		2			
103	264002-2	Square nut M5		2			
104	422257-7	Bellows		1			
105	183J31-5	Housing set		1			
C10	263005-3	Rubber pin 6		8			
105		INC. 112					
106	266326-2	Binding head tapping screw 4X18		9			
107	854H95-1	Name plate DHR280		1			
108	422256-9	Rubber ring 10		2			
109	257438-2	Sleeve 10		1			
110	346783-1	Plate		4			
111	620549-0	LED circuit		1			
112	183J31-5	Housing set		1			
C10	263005-3	Rubber pin 6		8			
112		INC. 105					
113	233598-4	Torsion spring 6		1			
114	313226-8	Opener		1			
115	644809-6	Terminal		2			
116	854J01-8	Serial No. label DHR280		1			
117	266326-2	Binding head tapping screw 4X18		4			
118	183J29-2	Handle set		1			
118		INC. 122					
119	453124-5	F/R change lever		1			
120	651366-7	Switch C3JW-6B-24		1			
121	632L95-3	Lead unit		1			
122	183J29-2	Handle set		1			
122		INC.118					
123	135966-6	Tool holder assembly		1	*		
123		INC. 31-45			*		
123-1	137276-7	Tool holder assembly	<	1			
123-1		INC. 31-45					
A02	198993-4	Grease vessel set		1			
A04	331886-4	Depth gauge		1			
A05	443122-7	Cloth		1	*		
A07B	***DX03	DUST EXTRACTION SYSTEM		1	*		
A07B		COMPO-PARTS			*		
A07B		INC. A08			*		
A07-1B	***DX08	DUST COLLECTION SYSTEM SET	<	1			
A07-1B		COMPO-PARTS					
A07-1B		INC. A08					
A08B	424474-5	Sealing cap		5			
A11A	839559-8	Inner tray		1			

A11B	839560-3	Inner tray		1	*		
A11-1 B	835A32-2	Inner tray	<	1			
A12	821552-6	Connector plastic case (type 4)		1			
C10	453974-8	Latch		4			
A13A	817L07-9	Indication label DHR280ZJ		1			
A13B	817L11-8	Indication label DHR280ZVJ		1			
A14A	817L03-7	Plastic case label DHR280ZJ		2	*		
A14B	817L09-5	Plastic case label DHR280ZVJ		2			
A14-1 A	817L04-5	Plastic case label DHR280ZJ	O	2			
B01	199233-3	Hammer service kit		1			
C10	195127-0	Oil vessel set		2			
B01		INC. 1,2,4,30,44,45,47					
E01	818S15-5	Clear label		1	*		
F04	192877-8	Drill chuck 13 set		1			
F05	192892-2	Keyless drill chuck set		1			
F06	194254-0	Keyless drill chuck set		1			
F15-1	199557-7	Filter set	<	1			
F18	198993-4	Grease vessel set		1			
F19-1	199581-0	Dust collection system set DX08	<	1			
F47	194683-7	Grease vessel set		1			
F48	198993-4	Grease vessel set		1			
F51	199555-1	Dust case set		1			
F53	1917K7-7	Dust extractor attachment set		1			
F56	1918R1-4	SEALING CAP B SET		1			
F57	1918L7-0	DUST EXTRACTION PAD SET		1			
G12	1914X3-8	Dust extraction pad set		1			