Model No.DHR242 Cordless Combination Hammer

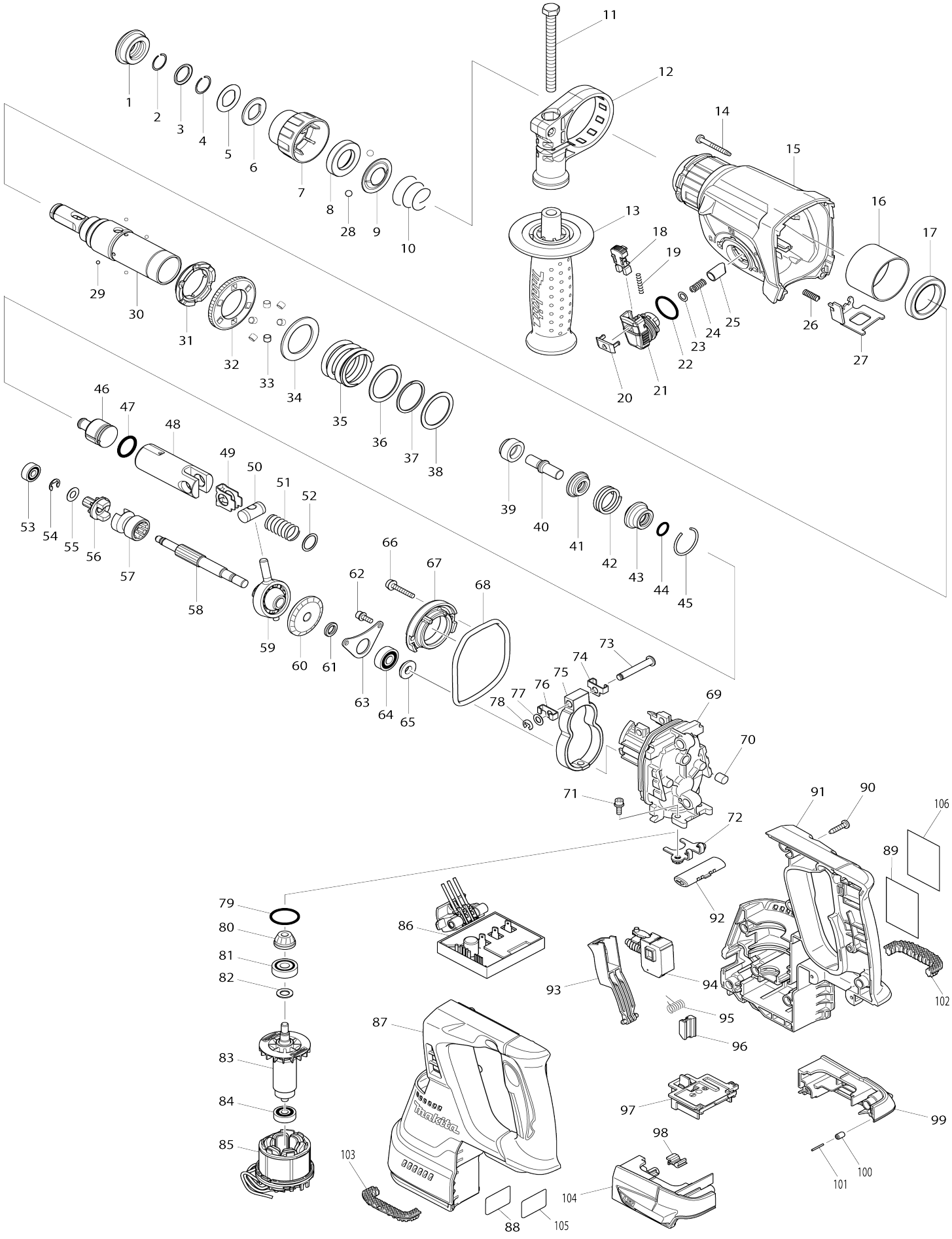

Model No.DHR242 Cordless Combination Hammer

Item No.	Parts No.	Description	Interchangeability	Q'ty	New/ Old	Note1	Note2
001	286288-8	Cap 35		1			
002	233989-9	Ring spring 14		1			
003	346221-3	Washer 16		1			
004	233992-0	Ring spring 15		1			
005	267437-6	Flat washer 17		1			
006	424364-2	Rubber washer 16		1			
007	451533-2	Chuck cover		1			
008	325813-1	Ring 21		1			
009	346177-0	Guide washer		1			
010	233916-6	Conical compression spring 21-29		1			
011	266745-2	Hex. head bolt M8X90		1			
012	453129-5	Grip base		1			
013	158057-6	Grip 36 complete		1			
014	266351-3	Binding head tapping screw 4X35		4			
014J	266351-3	Binding head tapping screw 4X35		4	*		
014-1J	265B69-5	Binding head tapping screw 4X35	O	4			
015	141229-0	Gear housing complete		1	*		
C10	213345-9	Oil seal 25		1	*		
C20	890903-4	Operation label		1	*		
015-1	144354-6	Gear housing complete	<	1			
C10	213345-9	Oil seal 25		1			
C20	810X86-8	Operation label	<	1			
016	331890-3	Cup sleeve		1			
017	211294-4	Ball bearing 6806LLU		1			
018	454112-5	Lock button		1			
019	234264-6	Compression spring 3		1			
020	453131-8	Change lever cover		1			
021	453125-3	Change lever		1			
022	213381-5	O-ring 21		1			
023	253308-3	Thin washer 6		1			
024	234147-0	Compression spring 5		1			
025	325785-0	Push cone		1	*		
025-1	326850-8	Push cone	S	1			
026	233360-7	Compression spring 4		1			
027	346537-6	Lock plate		1			
028	216022-2	Steel ball 7.0		2			
029	216019-1	Steel ball 3		4	*		
029J	216019-1	Steel ball 3		4	*		
029-1	216068-8	Steel ball 3	<	4			
029-1J	216061-2	Steel ball 3	O	4	*		
029-2J	216068-8	Steel ball 3	<	4			
030	140265-3	Tool holder complete		1			
031	313149-0	Driving flange		1	*		
031-1	332139-4	Driving flange	S	1			
031-1	332139-4	Driving flange		1			

U							
032	227232-6	Spur gear 51		1	*		
032-1	227360-7	Spur gear 51	S	1			
032-1U	227360-7	Spur gear 51		1			
033	268226-2	Pin 6		6	*		
034	267414-8	Flat washer 30		1	*		
035	234148-8	Compression spring 31		1			
036	267153-0	Flat washer 30		1			
037	257932-4	Spiro lock washer 30		1			
038	267153-0	Flat washer 30		1			
039	325783-4	Sleeve 9B		1			
040	325789-2	Impact bolt A		1			
041	325792-3	Washer 10		1			
042	234149-6	Compression spring 20		1			
043	325793-1	O-ring case B		1			
044	213073-6	O-ring 9		1			
045	233979-2	Ring spring 28		1			
046	326139-4	Striker		1			
047	213258-4	O-ring 17.5		1			
048	310345-1	Piston cylinder		1			
049	346036-8	Guide plate		1			
050	324215-8	Piston joint		1			
051	234098-7	Compression spring 14		1			
052	267447-3	Flat washer 14		1			
053	211012-0	Ball bearing 606ZZ		1			
054	257336-0	Stop ring (EXT) U-6		1			
055	253186-1	Flat washer 7		1			
056	227231-8	Spur gear 10		1			
057	331814-9	Clutch cam A		1	*		
057-1	326849-3	Clutch cam A	S	1			
058	326140-9	Cam shaft		1			
059	219020-5	Swash bearing 10		1	*		
059J	219020-5	Swash bearing 10		1	*		
059-1	219040-9	Swash bearing 10	O	1	*		
059-1J	219044-1	Swash bearing 10	O	1			
059-2	219044-1	Swash bearing 10	O	1			
060	227588-7	Spiral bevel gear 32		1			
061	257323-9	Ring 8		1			
062	922118-6	Hex. socket head bolt M4X12 WR		2			
063	346038-4	Bearing retainer B		1			
064	211032-4	Ball bearing 608ZZ		1			
065	324212-4	Ring 8		1			
066	922147-9	Hex. socket head bolt M4X25		2			
067	141230-5	Inner support complete		1			
068	213767-3	O-ring 75		1			
069	318810-4	Inner housing		1			
070	443153-6	Felt		1			
071	922118-6	Hex. socket head bolt M4X12 WR		2			
072	346536-8	Bearing retainer A		1			
073	256536-9	Flat fillister HD. pin 6		1			
074	346538-4	Weight holder guide		1			

075	313224-2	Counter weight		1			
076	346538-4	Weight holder guide		1			
077	253726-5	Flat washer 6		1			
078	961018-5	Stop ring (EXT) E-5		1			
079	213008-7	O-ring 22.4		1			
080	141458-5	Spiral bevel gear 11 complete		1			
081	210024-0	Ball bearing 608 LLU		1			
082	253835-0	Flat washer 8		1			
083	619293-4	Rotor		1	*		
083-1	619737-4	Rotor	S	1			
083-1		INC. 80-82,84					
084	210022-4	Ball bearing 626DDW		1			
085	629922-1	Stator		1	*		
085-1	529922-0	Stator assembly	<	1	*		
085-2	529187-4	Stator assembly	S	1			
086	620241-8	Controller		1	*		
086-1	620G68-8	Controller	<	1	*		
086-2	620U75-5	CONTROLLER	<	1			
087	187687-6	Housing set		1	*		
087		INC. 91			*		
087-1	183A34-5	Housing set	<	1	*		
087-1		INC. 91			*		
087-1	183A34-5	Housing set		1	*		
087-1		INC. 91			*		
087-2	183C02-0	Housing set	S	1	*		
087-2		INC. 91			*		
087-3	183C02-0	Housing set	O	1			
087-3		INC. 91					
088	815B57-8	Serial No. label DHR242		1			
089	815A38-6	Name plate DHR242		1			
090	266326-2	Binding head tapping screw 4X18		10	*		
090-1	266326-2	Binding head tapping screw 4X18	O	10			
090-1J	266326-2	Binding head tapping screw 4X18	O	10	*		
090-2J	265B67-9	Binding head tapping screw 4X18	O	10			
091	187687-6	Housing set		1	*		
091		INC. 87			*		
091-1	183A34-5	Housing set	<	1	*		
091-1		INC. 87			*		
091-1	183A34-5	Housing set		1	*		
091-1		INC. 87			*		
091-2	183C02-0	Housing set	S	1	*		
091-2		INC. 87			*		
091-3	183C02-0	Housing set	O	1			
091-3		INC. 87					
092	453124-5	F/R change lever		1			
093	453123-7	Switch lever		1			
094	650709-0	Switch C3JW-1A-P		1			
095	233598-4	Torsion spring 6		1			
096	313226-8	Opener		1			

097	644808-8	Terminal		1			
098	424476-1	Cushion		1			
099	187377-1	Battery housing set		1			
C10	263005-3	Rubber pin 6		2			
099		INC. 104					
099J	187377-1	Battery housing set		1	*		
C10	263005-3	Rubber pin 6		2	*		
099J		INC. 104			*		
099-1J	187377-1	Battery housing set	O	1			
C10	263005-3	Rubber pin 6		2			
099-1J		INC. 104					
100	263036-2	Rubber pin 5		1			
101	268184-2	Pin 1.5		1			
102	424473-7	Cushion rubber		1			
103	424473-7	Cushion rubber		1			
104	187377-1	Battery housing set		1			
C10	263005-3	Rubber pin 6		2			
104		INC. 99					
104J	187377-1	Battery housing set		1	*		
C10	263005-3	Rubber pin 6		2	*		
104J		INC. 99			*		
104-1J	187377-1	Battery housing set	O	1			
C10	263005-3	Rubber pin 6		2			
104-1J		INC. 99					
105	893072-0	Clear label		1	*		
105J	893072-0	Clear label		1	*		
106	890994-5	Clear label		1	*		
106J	890994-5	Clear label		1	*		
107	424734-5	Sponge	S	2			
A01	324219-0	Depth gauge		1			
A02	***DC18RC	DC18RC FAST CHARGER		1			
A02M	821552-6	Connector plastic case (type 4)		1			
C10	453974-8	Latch		4			
A03	194204-5	Battery BL1830 set		2	*		
A03M	837649-1	Inner tray		1			
A03	196399-0	Battery BL1840 set		2	*		
A03	196671-0	Battery BL1850 set		2	*		
A03-1	194204-5	Battery BL1830 set	O	2	*		
A03-1	196399-0	Battery BL1840 set	O	2	*		
A03-1	196671-0	Battery BL1850 set	O	2	*		
A03-1T	196671-0	Battery BL1850 set		2	*		
A03-2	197600-6	Battery BL1830B set	<	2	*		
A03-2	197265-4	Battery BL1840B set	<	2	*		
A03-2	197280-8	Battery BL1850B set	<	2	*		
A03-3	197600-6	Battery BL1830B set	O	2			
A03-3	197265-4	Battery BL1840B set	O	2			
A03-3	197280-8	Battery BL1850B set	O	2			
A04	450128-8	Battery cover		1			
A04M	802L14-5	Plastic case label DHR242ZJ		2			
A05	141401-4	Plastic case complete		1	*		
C10	162271-8	Latch		2	*		

C20	890904-2	Operation label		1	*		
A05K	141402-2	Plastic case complete		1	*		
C10	162271-8	Latch		2	*		
C20	890904-2	Operation label		1	*		
A05	821552-6	Connector plastic case (type 4)		1			
C10	453974-8	Latch		4			
A05M	802L34-9	Indication label DHR242ZJ		1			
A05-1	141542-6	Plastic case complete	O	1			
C10	162271-8	Latch		2			
C20	890904-2	Operation label		1			
A05-1K	140H96-8	Plastic case complete	<	1			
C10	162271-8	Latch		2			
C20	890904-2	Operation label		1			
A06I	802L23-4	Plastic case label DHR242RFE		2	*		
A06K	802L26-8	Plastic case label DHR242RFEV		2	*		
A06	837649-1	Inner tray		1			
A06	837677-6	Inner tray		1	*		
A06O	802L17-9	Plastic case label DHR242RME		2	*		
A06R	804J02-6	Plastic case label DHR242RTE		2			
A06-1I	802L12-9	Plastic case label DHR242RFE	<	2			
A06-1K	810L73-5	Plastic case label DHR242RFEV	<	2			
A06-1	835A31-4	Inner tray	S	1			
A06-1O	802L16-1	Plastic case label DHR242RME	<	2			
A07K	***DX01	DUST EXTRACTION SYSTEM		1			
A07K		COMPO-PARTS					
A07K		INC. A08					
A07L	802L13-7	Plastic case label DHR242RFJ		2			
A07N	802L15-3	Plastic case label DHR242RFJV		2			
A07P	802L18-7	Plastic case label DHR242RMJ		2			
A07Q	802L29-2	Plastic case label DHR242RMJV		2			
A07S	804J04-2	Plastic case label DHR242RTJ		2			
A07T	806F03-6	Plastic case label DHR242RTJV		2			
A07U	806J36-5	Plastic case label DHR242ZJV		2			
A08K	424474-5	Sealing cap		5	*		
A08L	802L33-1	Indication label DHR242RFJ		1			
A08N	802L35-7	Indication label DHR242RFJV		1			
A08P	802L36-5	Indication label DHR242RMJ		1			
A08Q	802K98-7	Indication label DHR242RMJV		1			
A08S	804J03-4	Indication label DHR242RTJ		1			
A08T	806F02-8	Indication label DHR242RTJV		1			
A08U	806J35-7	Indication label DHR242ZJV		1			
A08-1K	422784-4	Sealing cap	X	5			
A09	***DX01	DUST EXTRACTION SYSTEM		1			
A09		COMPO-PARTS					
A09		INC. A10					
A10	424474-5	Sealing cap		5	*		
A10-1	422784-4	Sealing cap	X	5			
A11	837349-3	Sponge 50-50	S	1			

B01	195833-7	Hammer service kit		1			
C10	195127-0	Oil vessel set		2			
B01		INC. 1,2,4,6,28,44,45,47					
F03	194254-0	Keyless drill chuck set		1			
F04	192664-5	Keyless drill chuck set		1	*		
F05	192892-2	Keyless drill chuck set		1			
F07	194683-7	Grease vessel set		1			
F31	192877-8	Drill chuck 13 set		1			
F38-3	197606-4	Battery BL1830B set (2 pcs)	O	1	*		
F46	195898-9	Dust collection system set		1			
F48-1	199977-5	Dust case set	O	1			
F50-1	199557-7	Filter set	O	1			
F52-3	197267-0	Battery BL1840B set	O	1			
F53-3	197265-4	Battery BL1840B set	O	1			
F54-3	197273-5	Battery BL1840B set (2 pcs)	O	1			
F63	199563-2	Dust collection system set DX06		1			
F71	199555-1	Dust case set		1			
F72	1917K7-7	Dust extractor attachment set		1			
F74	1918R1-4	SEALING CAP B SET		1			
F75	1918L7-0	DUST EXTRACTION PAD SET		1			
G12	1914X3-8	Dust extraction pad set		1			