Model No.DHR202 Cordless Combination Hammer

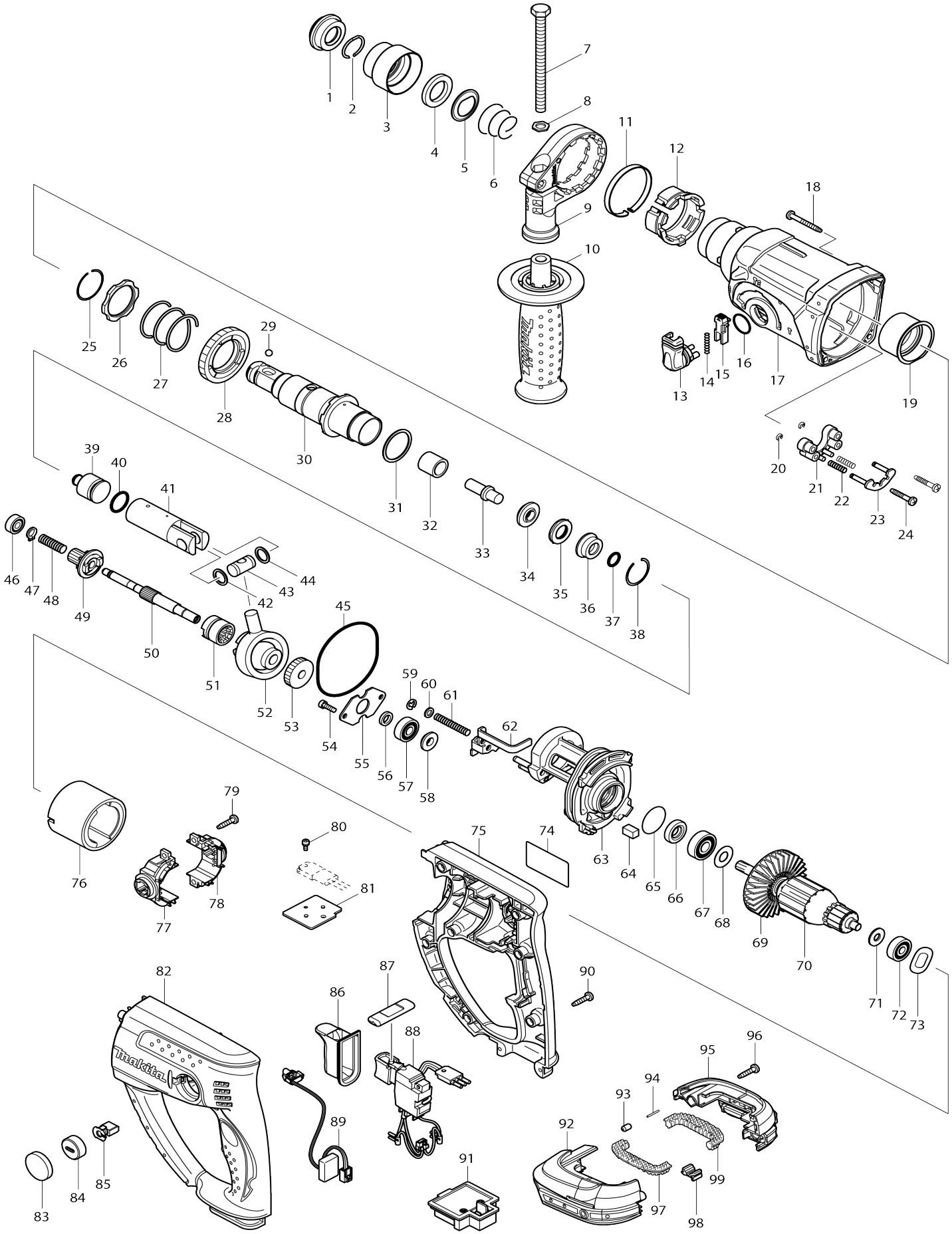

Model No.DHR202 Cordless Combination Hammer

Item No.	Parts No.	Description	Interchangeability	Q'ty	New/ Old	Note1	Note2
001	286263-4	Cap 35		1			
002	233940-9	Ring spring 19		1			
003	417629-9	Chuck cover		1			
004	257241-1	Ring 21		1			
005	345187-4	Guide washer		1			
006	233916-6	Conical compression spring 21-29		1			
007	921923-8	Hex. head bolt M8X120		1			
008	345280-4	Hex. washer		1			
009	417630-4	Grip base		1			
010	158057-6	Grip 36 complete		1			
C10	931402-8	Hex. nut M8		1			
013	162245-9	Change lever		1			
014	233459-8	Compression spring 3		1			
015	419192-8	Lock button		1			
016	213278-8	O-ring 17		1			
017	158216-2	Gear housing complete		1			
C10	213345-9	Oil seal 25		1			
018	266351-3	Binding head tapping screw 4X35		4			
019	153290-5	Needle bearing complete		1			
020	961017-7	Stop ring (EXT) E-3		2			
021	417796-0	Guide base		1			
022	233344-5	Compression spring 4		2			
023	163430-7	Lock plate complete		1			
024	266374-1	Binding head tapping screw 4X25		2			
025	233929-7	Ring spring 29		1			
026	267460-1	Washer 31		1			
027	233401-9	Compression spring 32		1			
028	227109-5	Spur gear 51		1			
029	216022-2	Steel ball 7.0		1			
030	158574-6	Tool holder complete		1			
031	267229-3	Flat washer 28		1			
032	331769-8	Sleeve 9		1			
033	324669-9	Impact bolt		1			
034	324402-9	Ring 10		1			
035	421955-0	Cushion ring 13		1			
036	324216-6	O-ring case		1			
037	213073-6	O-ring 9		1			
038	233917-4	Ring spring 28		1			
039	324214-0	Striker		1			
040	213227-5	O-ring 16		1			
041	318132-2	Piston cylinder		1			
042	267104-3	Flat washer 12		1			
043	324215-8	Piston joint		1			
044	267104-3	Flat washer 12		1			
045	213727-5	O-ring 63		1			

046	211012-0	Ball bearing 606ZZ		1	*		
046-1	210028-2	Ball bearing 606ZZ	O	1			
046-1	210028-2	Ball bearing 606ZZ		1			
047	961003-8	Retaining ring (EXT) S-7		1			
048	233343-7	Compression spring 7		1			
049	227179-4	Spur gear 10		1			
050	324668-1	Cam shaft		1			
051	331992-5	Clutch cam		1			
052	219014-0	Swash bearing 10		1	*		
052-1	219021-3	Swash bearing 10	O	1			
053	226632-7	Helical gear 25		1	*		
053-1	226985-4	Helical gear 25	S	1			
054	266273-7	Hex. socket head bolt M4X12		2			
055	345179-3	Bearing retainer		1			
056	267234-0	Flat washer 8		1	*		
057	211032-4	Ball bearing 608ZZ		1	*		
057-1	210029-0	Ball bearing 608ZZ	O	1			
057-1	210029-0	Ball bearing 608ZZ		1			
058	324212-4	Ring 8		1			
059	961011-9	Stop ring (EXT) E-4		1			
060	941102-2	Flat washer 5		1			
061	233342-9	Compression spring 6		1			
062	345363-0	Change plate		1			
063	141574-3	Inner housing complete		1			
065	213407-3	O-ring 26		1			
066	213077-8	Oil seal 10		1			
067	210059-1	Ball bearing 6000DDW		1			
068	267213-8	Flat washer 10		1			
069	240092-9	Fan 64		1			
070	519226-8	Armature assembly 18V		1			
070		INC. 67-69,71,72					
071	253823-7	Flat washer 7		1			
072	210023-2	Ball bearing 627DDW		1			
073	267816-8	Wave washer 15		1			
074	815F22-1	Name plate DHR202		1			
075	188515-8	Housing set		1			
075		INC. 82					
076	638020-0	Yoke unit		1			
077	638977-5	Brush holder complete		1	*		
077-1	632U14-3	Brush holder complete	O	1			
079	266326-2	Binding head tapping screw 4X18		2			
080	911011-9	Pan head screw M3X10 W		1			
081	689070-8	Heat sink		1			
082	188515-8	Housing set		1			
082		INC. 75					
083	424128-4	Holder cap cover		2			
084	643829-7	Holder cap		2			
085	194435-6	Carbon brush set CB-441		1	*		
085-1	195022-4	Carbon brush set CB-441	O	1			
086	424111-1	Switch cover		1			
087	450615-7	F/R change lever		1			

088	638882-6	Switch unit		1			
C10	654199-9	Receptacle		2			
089	631792-6	Light circuit		1			
090	266326-2	Binding head tapping screw 4X18		7			
091	644808-8	Terminal		1			
092	187212-3	Battery housing set		1			
C10	263005-3	Rubber pin 6		2			
092		INC. 95					
093	263036-2	Rubber pin 5		1			
094	268184-2	Pin 1.5		1			
095	187212-3	Battery housing set		1			
C10	263005-3	Rubber pin 6		2			
095		INC. 92					
096	266326-2	Binding head tapping screw 4X18		2			
097	424042-4	Cushion rubber		1			
098	424476-1	Cushion		1			
099	424042-4	Cushion rubber		1			
100	123100-0	Tool holder assembly		1			
100		INC. 25-28,30,32-38					
A01	324219-0	Depth gauge		1			
A02	194204-5	Battery BL1830 set		2	*		
A02	821551-8	Connector plastic case (type 3)		1			
C10	453974-8	Latch		4			
A02O	196399-0	Battery BL1840 set		2	*		
A02Q	196671-0	Battery BL1850 set		2	*		
A02-1	194204-5	Battery BL1830 set	O	2	*		
A02-1O	196399-0	Battery BL1840 set	O	2	*		
A02-1Q	197280-8	Battery BL1850B set	<	2	*		
A02-1R	196235-0	Battery BL1815N set		2			
A02-2	197600-6	Battery BL1830B set	<	2	*		
A02-2O	197265-4	Battery BL1840B set	<	2	*		
A02-2Q	197280-8	Battery BL1850B set	O	2			
A02-3	197600-6	Battery BL1830B set	O	2			
A02-3O	197265-4	Battery BL1840B set	O	2			
A03	450128-8	Battery cover		1			
A03	837634-4	Inner tray		1			
A04	***DC18RC	DC18RC FAST CHARGER		1			
A04N	802W03-6	Indication label DHR202ZJ		1			
A04P	803X48-3	Indication label DHR202YJ		1	*		
A04R	***DC18SD	DC18SD BATTERY CHARGER		1			
A04-1P	805U28-7	Indication label DHR202Y1J	<	1			
A05	141642-2	Plastic case complete		1			
C10	163455-1	Latch		2			
A05	821551-8	Connector plastic case (type 3)		1			
C10	453974-8	Latch		4			

A05N	802W05-2	Plastic case label DHR202ZJ		2			
A05P	803X49-1	Plastic case label DHR202YJ		2	*		
A05-1P	805U29-5	Plastic case label DHR202Y1J	<	2			
A06	837634-4	Inner tray		1			
A06P	196235-0	Battery BL1815N set		1	*		
A06-1P	196235-0	Battery BL1815N set	O	1			
A07M	802W02-8	Indication label DHR202RFJ		1			
A07O	802W00-2	Indication label DHR202RMJ		1			
A07Q	806F83-2	Indication label DHR202RTJ		1			
A08M	802W04-4	Plastic case label DHR202RFJ		2			
A08O	802W01-0	Plastic case label DHR202RMJ		2			
A08Q	806F84-0	Plastic case label DHR202RTJ		2			
B01	195193-7	Hammer service kit		1			
C10	195127-0	Oil vessel set		1			
B01		INC. 1,29,35,37,38,40,85					
F04	194254-0	Keyless drill chuck set		1			
F05	192664-5	Keyless drill chuck set		1	*		
F06	1914C6-5	Grease set		1			
F14	192877-8	Drill chuck 13 set		1			
F24	192278-0	Hose complete 28-1.5 set		1			
F25	192349-3	Joint 25 set		1			
F29	192892-2	Keyless drill chuck set		1			
F30	194649-7	Battery protector set		1			
C10	251314-2	Truss head screw M4X12		2			
F32	194582-3	Grip base set		1			
F36	196448-3	Battery BL1815N set		1	*		
F36-2	196235-0	Battery BL1815N set	O	1			
F37-1	196449-1	Battery BL1815N set	O	1			
F38	196450-6	Battery BL1815N set		1	*		
F38-2	196449-1	Battery BL1815N set	O	1			
F48	1917K7-7	Dust extractor attachment set		1			
F50	1918R1-4	SEALING CAP B SET		1			
F51	1918L7-0	DUST EXTRACTION PAD SET		1			
G12	1914X3-8	Dust extraction pad set		1			

Please state Parts No. when your order.

Print Date 08/21/2026