Model No.DHG180 HEAT GUN

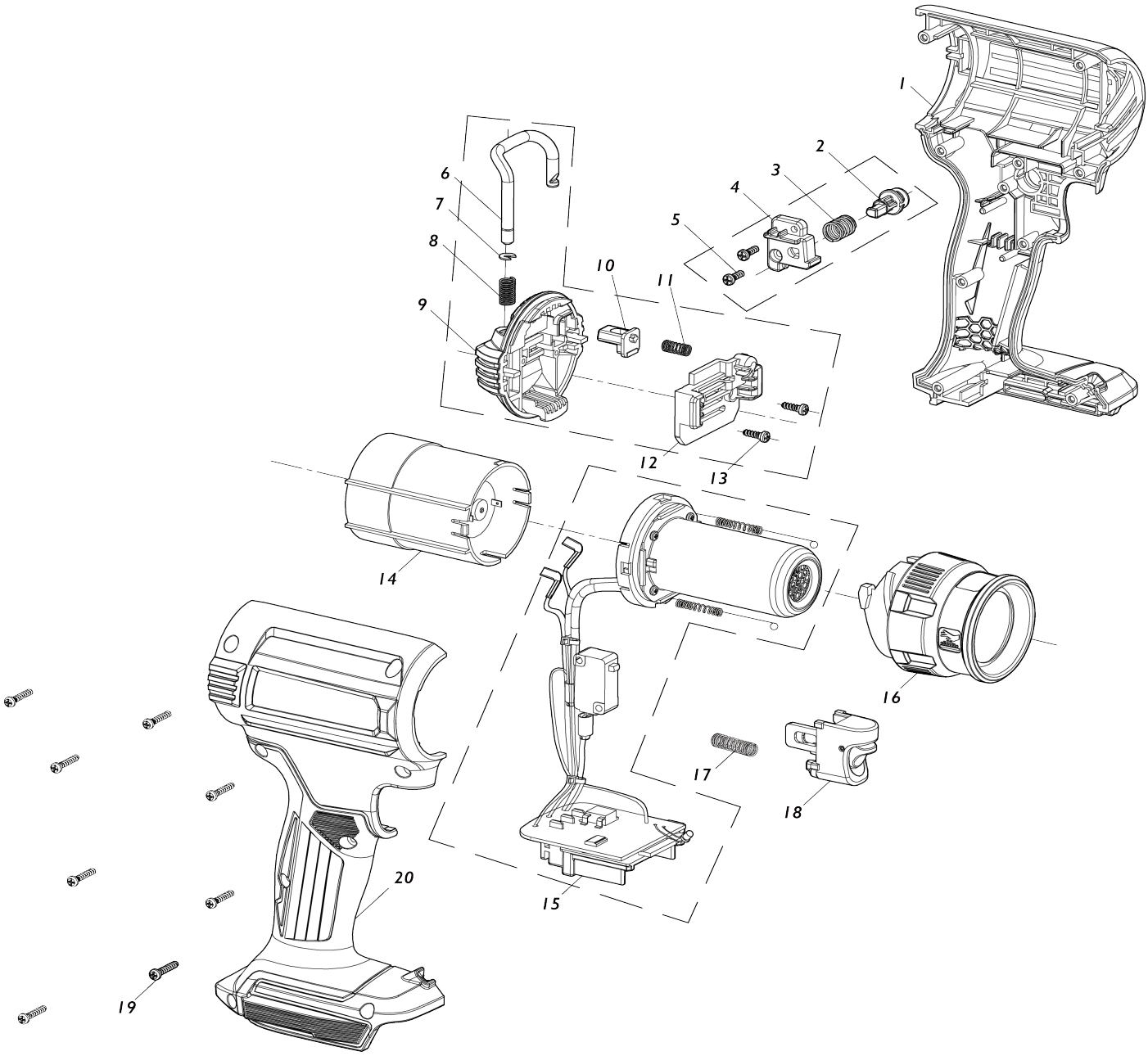

Model No.DHG180 HEAT GUN

Item No.	Parts No.	Description	Interchangeability	Q'ty	New/ Old	Note1	Note2
001	PR00000379	HOUSING ASSEMBLY		1			
001		INC. 20					
002	PR00000380	LOCK ON BUTTON		1			
003	PR00000381	SPRING9		1			
004	PR00000382	SUPPORT FRAME		1			
005	PR00000293	TAPPING SCREW ST2.9X10		2			
006	PR00000383	HOOK		1			
007	PR00000384	SNAP RING		1	*		
007-1	PR00000384	SNAP RING	O	1			
008	PR00000385	SPRING6		1			
009	PR00000386	REAR COVER		1			
010	PR00000387	HOOK RELEASE BUTTON		1			
011	PR00000388	SPRING5		1			
012	PR00000389	INNER COVER		1			
013	PR00000293	TAPPING SCREW ST2.9X10		2			
014	PR00000390	MOTOR ASSEMBLY		1	*		
014-1	PR00000515	MOTOR ASSEMBLY	<	1			
015	PR00000391	HEATER ASSEMBLY		1			
016	PR00000392	FRONT COVER ASSEMBLY		1			
017	PR00000393	SPRING 4		1			
018	PR00000394	TRIGGER ASSEMBLY		1			
019	PR00000395	TAPPING SCREW ST2.9X16		8			
020	PR00000379	HOUSING ASSEMBLY		1			
020		INC. 1					
A01B	821550-0	CONNECTOR PLASTIC CASE (TYPE2)		1			
C10	453974-8	LATCH		4			
A02B	PR00000419	INNER TRAY		1			
A04A	PR00000406	COLOR BOX		1			
A09B	***DC18RC	DC18RC FAST CHARGER		1			
A10B	197280-8	BATTERY BL1850B SET		1			
A11B	450128-8	BATTERY COVER		1			

Please state Parts No. when your order.

Print Date 05/30/2025