Model No.DGP180 Cordless Grease Gun

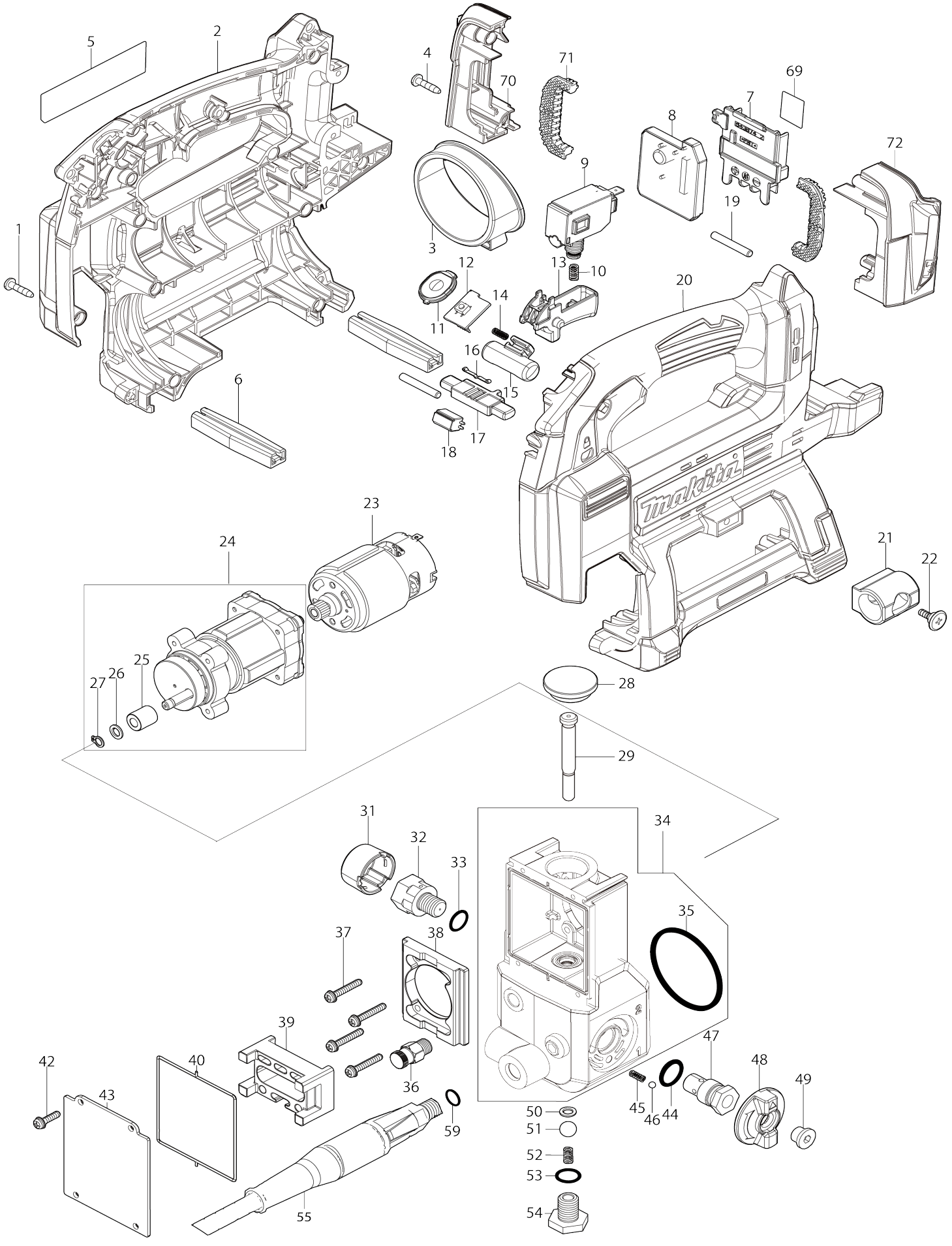

Model No.DGP180 Cordless Grease Gun

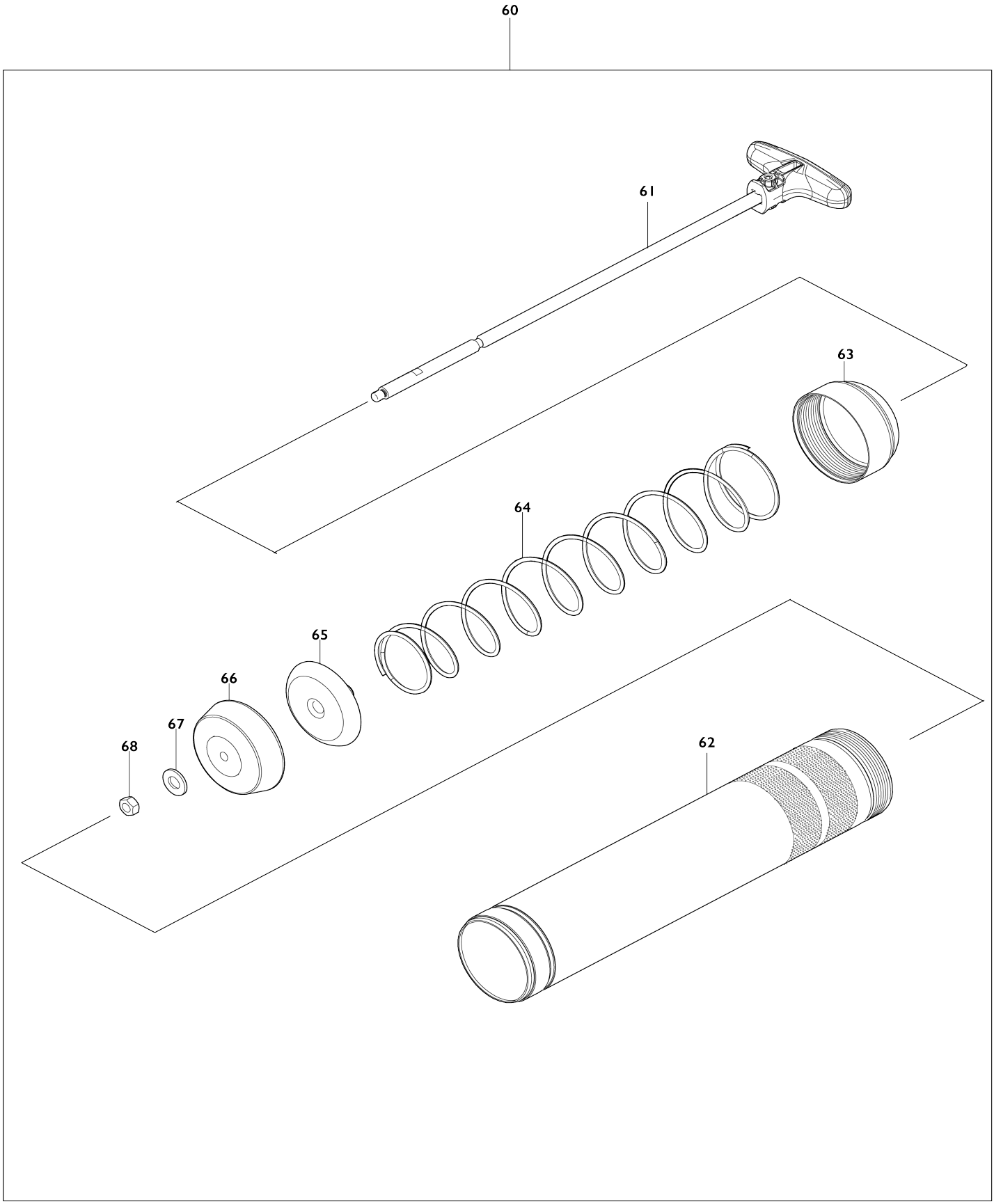

Model No.DGP180 Cordless Grease Gun

Item No.	Parts No.	Description	Interchangeability	Q'ty	New/ Old	Note1	Note2
001	265995-6	Binding head tapping screw 4X18		13			
002	183R38-9	Housing set		1			
C10	263002-9	Rubber pin 4		2			
C20	252126-6	Hex. lock nut M4-7		2	*		
C21	252303-0	Hex. lock nut M4-7	O	2			
002		INC. 20					
003	459621-9	Barrel holder		1			
004	265995-6	Binding head tapping screw 4X18		2			
005	856C52-5	Name plate DGP180		1			
006	422479-9	Foot		2			
007	644809-6	Terminal		1	*		
007-1	644028-4	Terminal	O	1			
008	620A88-6	Controller		1			
C10	688164-6	Line filter		1			
009	651391-8	Switch C3JW-6BM-PN		1			
010	233306-3	Compression spring 4		1			
011	140M75-6	Switch plate complete		1			
C10	819V26-1	Switch label		1			
012	620A89-4	Switch circuit		1			
013	459623-5	Switch lever		1			
014	231433-0	Compression spring 4		1			
015	419705-5	Lock on button		1			
016	232201-4	Leaf spring		1			
017	459624-3	Lock off button		1			
018	620A90-9	LED circuit		1			
019	268306-4	Pin 5		2			
020	183R38-9	Housing set		1			
C10	263002-9	Rubber pin 4		2			
C20	252126-6	Hex. lock nut M4-7		2	*		
C21	252303-0	Hex. lock nut M4-7	O	2			
020		INC. 2					
021	422643-2	Hose holder		1			
022	265B56-4	Flat head shoulder screw M4X14		1			
023	629387-7	DC motor		1			
024	136124-7	Gear assembly		1	*		
024		INC. 25-27			*		
024-1	136124-7	Gear assembly	O	1			
024-1		INC. 25-27					
025	214079-7	Plain bearing 6		1			
026	253477-0	Flat washer 6		1			
027	961002-0	Retaining ring (EXT) S-6		1	*		
027-1	961022-4	Retaining ring (EXT) round S-6	O	1	*		
027-2	961002-0	Retaining ring (EXT) S-6	O	1			
028	286043-8	Cap 32		1			
029	256951-7	Shoulder pin 7-8		1			
031	459622-7	Valve cover		1			

032	140M83-7	Relief valve complete		1			
033	213918-8	O-ring 12.5		1			
034	136128-9	Pump housing assembly		1	*		
C10	265A55-0	Hex. socket set screw (flat point) NPT1/8-27X9		1	*		
C11	265A55-0	Hex. socket set screw (flat point) NPT1/8-27X9	O	1	*		
034		INC. 35			*		
034-1	136128-9	Pump housing assembly	O	1			
C11	265A55-0	Hex. socket set screw (flat point) NPT1/8-27X9	O	1			
034-1		INC. 35					
035	422476-5	Rubber packing A		1			
036	162667-3	Drain valve		1	*		
036-1	162667-3	Drain valve	O	1	*		
036-2	162B92-0	Drain valve	O	1	*		
036-3	162B81-5	Drain valve	O	1			
037	911148-2	Pan head screw M4X25 WR		4			
038	310961-9	Slider guide		1			
039	310960-1	Slider		1			
040	422480-4	Seal ring		1			
042	911128-8	Pan head screw M4X16 WR		4			
043	347546-8	Pump cover		1			
044	213182-1	O-ring 14		1			
045	233151-6	Compression spring 4		1			
046	216008-6	Steel ball 4		1			
047	140M82-9	Change valve complete		1			
048	459620-1	Dial		1			
049	265A57-6	Hex. socket head bolt M10X7		1			
050	257494-2	Ring 8		1			
051	216003-6	Steel ball 10		1			
052	232557-5	Compression spring 4		1			
053	213918-8	O-ring 12.5		1			
054	265A56-8	Hex. head bolt M12X16		1			
055	191A79-9	Flexible hose 1200 set		1	*		
C10	162662-3	Adapter		1	*		
055-1	191W58-9	Flexible hose 1200 set	O	1	*		
C10	191W61-0	Adapter set (1 pc)		1	*		
055-2	1916S5-1	Flexible hose 1200 set	<	1			
C10	1915L9-8	Adapter set (1 pc)		1			
059	213054-0	O-ring 9		1			
060	191B12-7	Barrel assembly A set		1	*		
060		INC. 61-68			*		
060-1	122D16-0	Barrel assembly A	O	1			
C10	413K05-1	Front plate A	S	1			
060-1		INC. 61-68					
061	140T28-7	Shaft complete		1			
C10	459619-6	Lever		1			
C20	951116-3	Spring pin 4-20		1			
062	327379-7	Barrel A		1			
063	347543-4	Cap A		1			
064	232684-8	Conical compression spring		1	*		

064-1	232775-5	Conical spring	S	1			
065	413459-6	Plate A		1			
066	422685-6	Rubber seal A		1			
067	253494-0	Flat washer 8		1	*		
067-1	941201-0	Flat washer 8	S	1			
068	931302-2	Hex. nut M6		1			
069	856C61-4	Serial No. label DGP180		1			
070	187303-0	Battery housing set		1			
070		INC. 72					
071	424473-7	Cushion rubber		2			
072	187303-0	Battery housing set		1			
072		INC. 70					
A01	166094-6	Shoulder belt		1	*		
A01-1	162E74-0	Shoulder belt	O	1			
A02B	821840-1	Plastic case		1	*		
C10	162271-8	Latch		2	*		
A02-1B	821946-5	Plastic case	<	1			
C10	162271-8	Latch		2			
A03B	***DC18RC	DC18RC FAST CHARGER		1			
A03B		COMPO-PARTS					
A04B	197280-8	Battery BL1850B set		1			
A06B	450128-8	Battery cover		1			
F01	191A76-5	Lock on adapter set		1	*		
F01-1	1915N4-2	Lock on adapter set	O	1			
F02	191A77-3	Angle adapter set		1	*		
F02-1	1916U8-9	Angle adapter set	O	1			
F03	191W60-2	Adapter set (3 pcs)		1	*		
F03-1	1915M0-3	Adapter set (3 pcs)	O	1			
F04	191W58-9	Flexible hose 1200 set		1	*		
F04-1	1916S5-1	Flexible hose 1200 set	<	1			
F05	191W59-7	Flexible hose 600 set		1	*		
F05-1	1916S7-7	Flexible hose 600 set	<	1			
F06	1910X0-0	Barrel assembly A set		1			
F08	1910X3-4	Barrel assembly C set		1			
F09	191F24-4	Cartridge barrel A set		1			
F10	1910X4-2	Cartridge barrel B set		1			
F11	191F27-8	Cartridge barrel C set		1			
F12	191W61-0	Adapter set (1 pc)		1	*		
F12-1	1915L9-8	Adapter set (1 pc)	<	1			
F13	1910X1-8	Barrel assembly B set		1			
F15	1910T7-8	Barrel assembly C set		1			
F17	1910T3-6	Cartridge barrel assembly A set		1			
F18	1910T4-4	Cartridge barrel assembly B set		1			
F19	1910T5-2	Cartridge barrel assembly C set		1			
F20	1910T6-0	Cartridge barrel assembly C set		1			
F21	1911M9-1	Extension pipe set		1			
F23	1914G9-7	Loader fitting set		1			
F24	191A79-9	Flexible hose 1200 set		1	*		
F25	191A80-4	Flexible hose 600 set		1	*		
F26	1919A5-3	JOINT 400 SET		1			