Model No.DGD800 CORDLESS DIE GRINDER

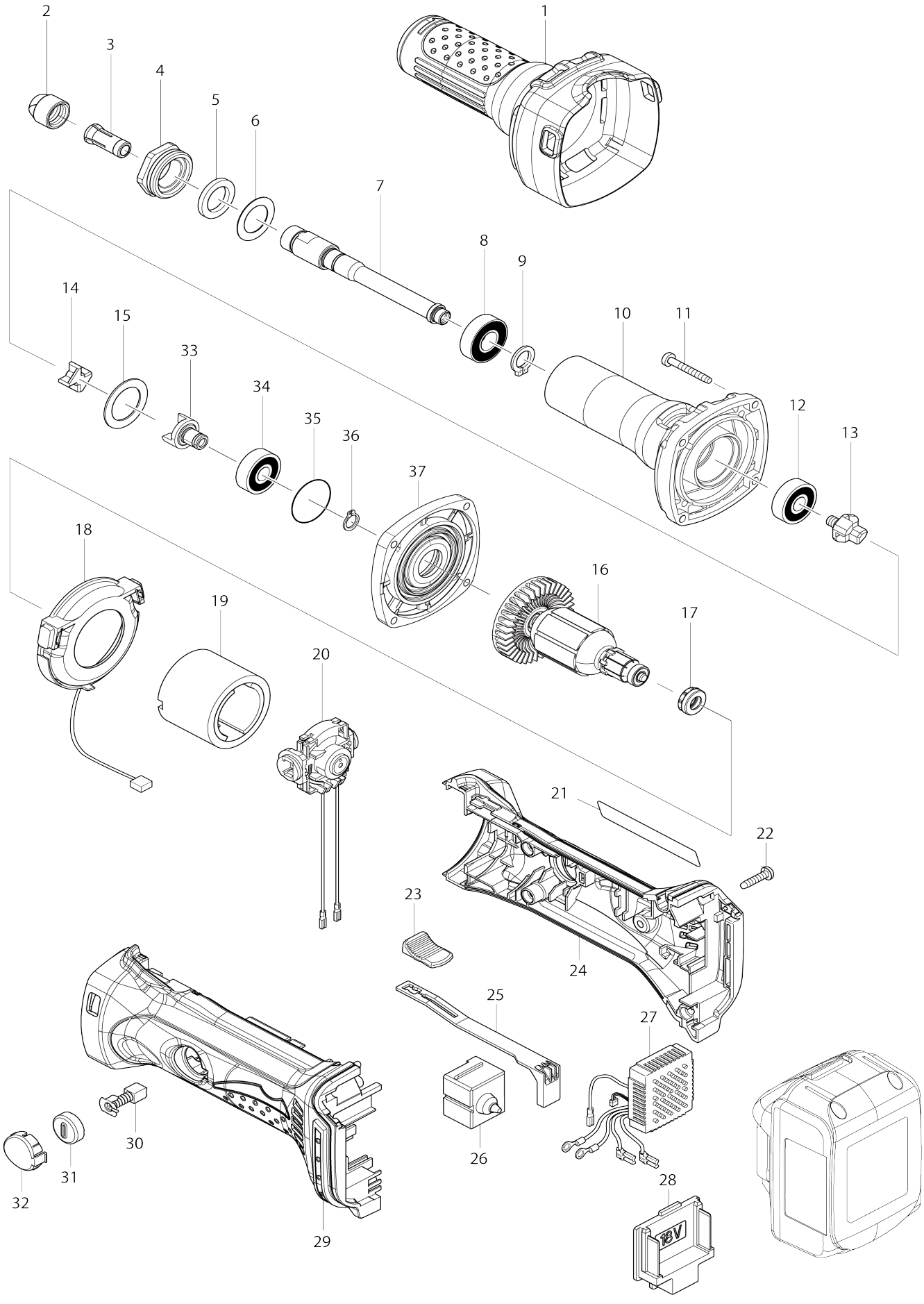

Model No.DGD800 CORDLESS DIE GRINDER

Item No.	Parts No.	Description	Interchangeability	Q'ty	New/ Old	Note1	Note2
001	424380-4	Insulation cover		1			
002	763668-0	Collet nut		1			
003	763670-3	Collet cone 6		1			
004	317999-5	Bearing retainer		1			
005	443124-3	Felt ring 17		1			
006	267329-9	Flat washer 18		1			
007	326010-2	Spindle		1			
008	210106-8	Ball bearing 6001LLB		1			
009	961052-5	Retaining ring (EXT) S-12		1			
010	318000-9	Barrel		1			
011	266361-0	Binding head tapping screw 4X30		4			
012	210042-8	Ball bearing 629LLB		1			
013	324639-8	Coupling		1			
014	421942-9	Spacer		1			
015	267126-3	Flat washer 22		1			
016	619284-5	Armature		1			
016		INC. 17					
017	421977-0	Rubber ring 13		1			
018	631714-6	LED circuit		1			
019	638627-2	Yoke unit		1			
020	638921-2	End bell complete		1			
021	815P35-2	Name plate DGD800		1			
021	815P35-2	Name plate DGD800		1			
022	265995-6	Binding head tapping screw 4X18		5	*		
022-1	266326-2	Binding head tapping screw 4X18	O	5			
023	419566-3	Switch knob		1			
024	187843-8	Housing set		1			
C10	263005-3	Rubber pin 6		2			
024		INC. 29					
025	419519-2	Switch lever		1			
026	650579-7	Switch 1246.3223		1	*		
026-1	650579-7	Switch 1246.3223	O	1			
027	620243-4	Controller		1	*		
027-1	620G22-2	Controller	<	1			
028	644808-8	Terminal		1			
029	187843-8	Housing set		1			
C10	263005-3	Rubber pin 6		2			
029		INC. 24					
030	191971-3	Carbon brush set		1			
031	643929-3	Holder cap		2			
032	419518-4	Holder cap cover		2			
033	326009-7	Coupling		1			
034	210042-8	Ball bearing 629LLB		1			
035	213445-5	O-ring 26		1	*		
035-1	213407-3	O-ring 26	O	1			

036	961005-4	Retaining ring (EXT) S-9		1			
037	317821-6	Gear housing cover		1			
A01	781039-9	Wrench 13		2			
A02	450128-8	Battery cover		2			
A03	***DC18RC	DC18RC FAST CHARGER		1			
A04	194204-5	Battery BL1830 set		2	*		
A04I	196235-0	Battery BL1815N set		1	*		
A04J	196399-0	Battery BL1840 set		2	*		
A04-1	194204-5	Battery BL1830 set	O	2	*		
A04-1I	196235-0	Battery BL1815N set	O	1			
A04-1J	196399-0	Battery BL1840 set	O	2	*		
A04-2	197600-6	Battery BL1830B set	<	2	*		
A04-2J	197265-4	Battery BL1840B set	<	2	*		
A04-2K	197280-8	Battery BL1850B set		2	*		
A04-3	197600-6	Battery BL1830B set	O	2			
A04-3J	197265-4	Battery BL1840B set	O	2			
A04-3K	197280-8	Battery BL1850B set	O	2			
A05F	141482-8	Plastic case complete		1			
C10	162315-4	Latch		2			
A05	821550-0	Connector plastic case (type 2)		1			
C10	453974-8	Latch		4			
A06F	803U25-7	Plastic case label DGD800RFE		2			
A06	837806-1	Inner tray		1			
A07G	803U21-5	Indication label DGD800RFJ		1			
A07H	803U23-1	Indication label DGD800ZJ		1			
A07I	804E83-0	Indication label DGD800Y1J		1			
A07J	804E98-7	Indication label DGD800RMJ		1			
A07K	808W85-6	Indication label DGD800RTJ		1			
A08G	803U22-3	Plastic case label DGD800RFJ		2			
A08H	803U24-9	Plastic case label DGD800ZJ		2			
A08I	804E84-8	Plastic case label DGD800YJ		2			
A08J	804E99-5	Plastic case label DGD800RMJ		2			
A08K	808W86-4	Plastic case label DGD800RTJ		2			
F15	196448-3	Battery BL1815N set		1	*		
F15-2	196235-0	Battery BL1815N set	O	1			
F16-1	196449-1	Battery BL1815N set	O	1			
F17	196450-6	Battery BL1815N set		1	*		
F17-2	196449-1	Battery BL1815N set	O	1			