Model No.DG002G CORDLESS EARTH AUGER

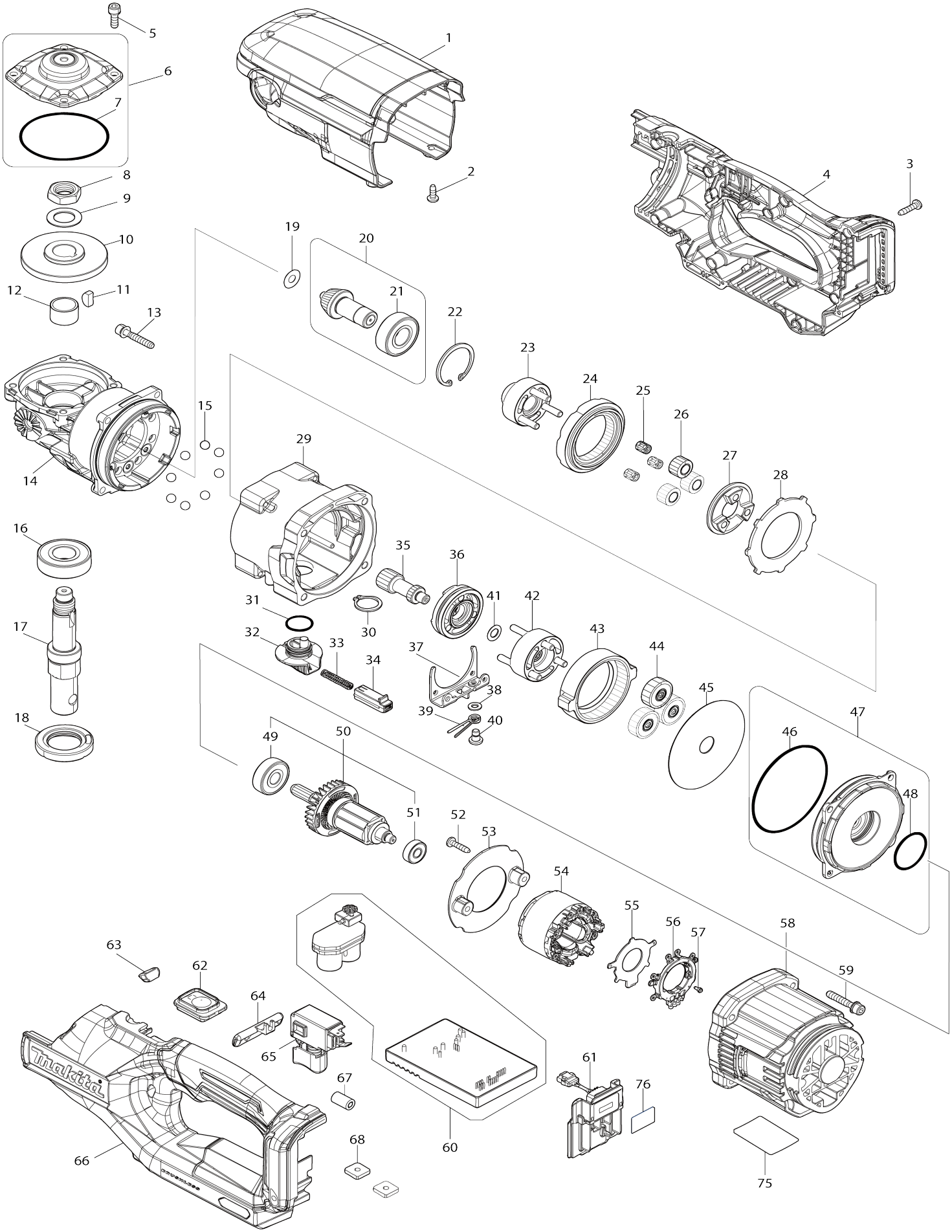

Model No.DG002G CORDLESS EARTH AUGER

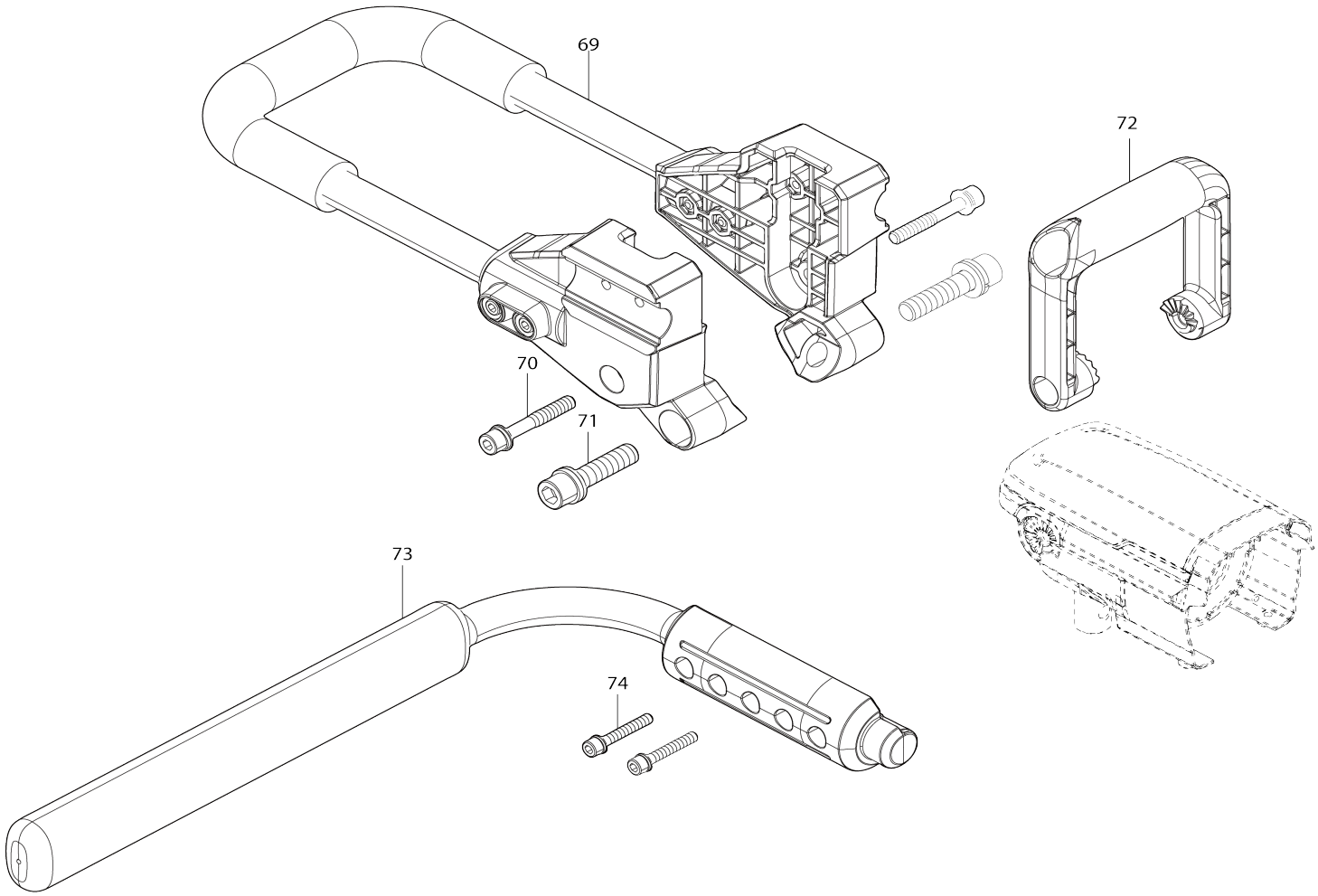

Model No.DG002G CORDLESS EARTH AUGER

Item No.	Parts No.	Description	Interchangeability	Q'ty	New/ Old	Note1	Note2
001	458430-3	TOP COVER		1			
002	266026-4	TAPPING SCREW BIND CT 4X12		2			
003	266326-2	TAPPING SCREW 4X18		10			
004	183Y57-7	HANDLE SET		1			
C10	263005-3	RUBBER PIN 6		2			
C20	252126-6	HEX. LOCK NUT M4-7		1			
C30	8012U4-2	XGT LOGO LABEL		1			
004		INC. 66					
005	266086-6	HEX. SOCKET HEAD BOLT M5X16		4			
006	140A21-7	GEAR HOUSING COVER COMPLETE		1			
006		INC. 7					
007	213709-7	O RING 63		1			
008	252267-8	HEX. NUT M16-22		1			
009	253771-0	FLAT WASHER 16		1			
010	227920-5	SPIRAL BEVEL GEAR 40		1			
011	254032-1	WOODRUFF KEY 5		1			
012	257440-5	SLEEVE 17		1			
013	265695-8	H. S. H. BOLT M5X30 WITH WRM		4	*		
013-1	265D24-9	H. S. H. BOLT M5X30 WITH WRM	O	4	*		
013-2	265E69-3	Hex. socket head bolt M5X30 WRM	O	4			
014	141D39-9	GEAR HOUSING COMPLETE		1			
C10	213507-9	O RING 40		1			
C20	213755-0	O RING 75		1			
015	216022-2	STEEL BALL 7.0		8			
016	211278-2	BALL BEARING 6203DDW		1			
017	327C19-5	SPINDLE		1			
018	141S89-4	BEARING RETAINER32-43 COMPLETE		1			
019	253411-0	FLAT WASHER 6		1			
020	136563-1	SPIRAL BEVEL GEAR 13 ASS'Y		1			
020		INC. 21					
021	211206-7	BALL BEARING 6202LLB		1			
022	962153-2	RETAINING RING R-35		1			
023	140A13-6	CARRIER A COMPLETE		1			
024	226177-5	INTERNAL GEAR 40		1			
025	212193-3	NEEDLE CAGE 5810		3			
026	226176-7	SPUR GEAR 13		3			
027	223188-1	CAM		1			
028	347365-2	WASHER 65		1			
029	127809-6	GEAR CASE COMPLETE		1			
030	961058-3	RETAINING RING (EXT) S-18		1			
031	213265-7	O RING 17		1			
032	458433-7	CHANGE LEVER		1			
033	233279-0	COMPRESSION SPRING 4		1			
034	458434-5	LOCK BUTTON		1			
035	226175-9	SPUR GEAR 14		1			

036	310876-0	CHANGE RING		1			
037	347366-0	CHANGE GUIDE		1			
038	267010-2	FLAT WASHER 5		1			
039	231657-8	TORSION SPRING 6		1			
040	265628-3	+ BINDING HEAD SCREW M5		1			
041	253215-0	FLAT WASHER 8		1			
042	140A14-4	CARRIER B COMPLETE		1			
043	226174-1	INTERNAL GEAR 71		1			
044	140A12-8	SPUR GEAR 29 COMPLETE		3			
045	253412-8	FLAT WASHER 15		1			
046	213755-0	O RING 75		1			
047	140A20-9	MOTOR BRACKET COMPLETE		1			
047		INC. 46,48					
048	213406-5	O RING 30		1			
049	211087-9	BALL BEARING 6200DDW		1			
050	519689-8	ROTOR ASSY		1	*		
050		INC. 49,51			*		
050-1	519689-8	ROTOR ASSY	O	1			
050-1		INC. 49,51					
051	211022-7	BALL BEARING 607ZZ		1			
052	266326-2	TAPPING SCREW 4X18		2			
053	458427-2	BAFFLE PLATE		1			
054	629B69-3	STATOR		1			
055	620K74-7	CONTROLLER B		1	*		
055-1	620R29-4	Controller B	S	1			
056	638A31-1	LEAD UNIT		1			
057	652119-7	PAN HEAD SCREW M2X6		6			
058	458426-4	MOTOR HOUSING		1			
059	265695-8	H. S. H. BOLT M5X30 WITH WRM		4	*		
059-1	265D24-9	H. S. H. BOLT M5X30 WITH WRM	O	4	*		
059-2	265E69-3	Hex. socket head bolt M5X30 WR M	O	4			
060	620F91-7	CONTROLLER		1	*		
060-1	620P58-5	Controller	<	1	*		
060-2	620R38-3	Controller	S	1			
061	632P65-6	TERMINAL UNIT		1			
062	140A19-4	SWITCH CIRCUIT COMPLETE		1			
063	620839-1	LED CIRCUIT		1			
064	458432-9	F/R CHANGE LEVER		1			
065	651443-5	SWITCH C3JR-4B		1			
066	183Y57-7	HANDLE SET		1			
C10	263005-3	RUBBER PIN 6		2			
C20	252126-6	HEX. LOCK NUT M4-7		1			
C30	8012U4-2	XGT LOGO LABEL		1			
066		INC. 4					
067	688162-0	LINE FILTER		1			
068	264002-2	SQUARE NUT M5		2			
069	127688-2	PIPE GRIP ASSEMBLY		1			
070	922478-6	H.S.H.BOLT M8X55 WITH WR		2			
071	922673-8	H.S.H.BOLT M12X50 WITH WR		2			
072	458431-1	FRONT GRIP		1			
073	141N53-5	PIPE COMPLETE		1			

074	922363-3	H.S.H.BOLT M6X40 WITH WR		2			
075	8140R4-0	DG002G NAME PLATE		1			
076	8140R9-0	DG002G SERIAL NO.LABEL		1			
A01	783204-6	HEX. WRENCH 6		1			
A02	783207-0	HEX. WRENCH 10		1			
A03	783232-1	HEX. WRENCH 5		1	*		
A03-1	783217-7	HEX. WRENCH 5	O	1			
A04	922453-2	HEX.SOCKET HEAD BOLT M8X30		2			
A05B	***DC40RA	DC40RA FAST CHARGER		1			
A05B		COMPO-PARTS					
A06B	191B26-6	BATTERY BL4040 SET		1			
F01	191P11-3	HANDLE SET		1			

Please state Parts No. when your order.

Print Date 05/30/2025