Model No.DDF458 Cordless Driver Drill

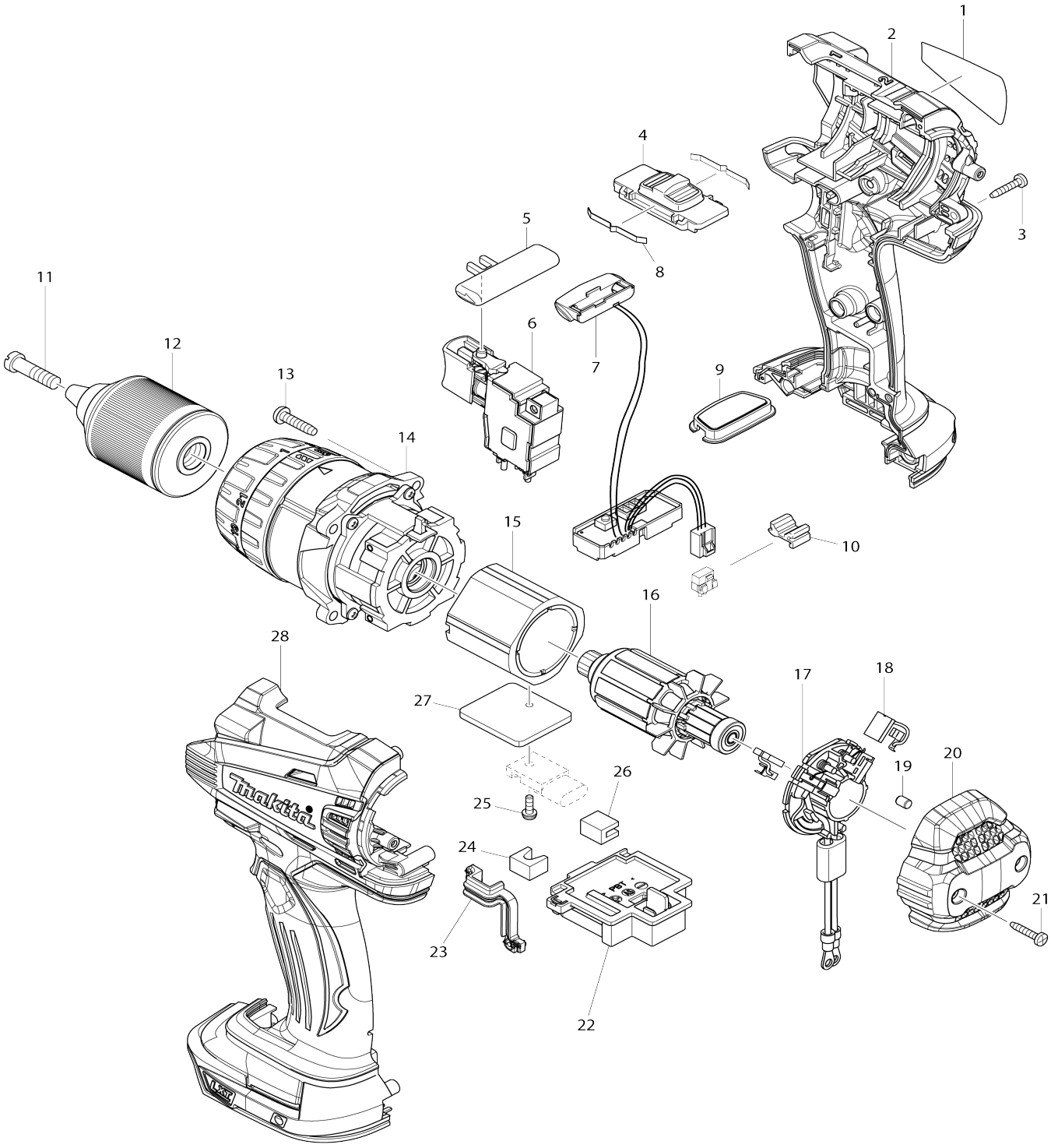

Model No.DDF458 Cordless Driver Drill

Item No.	Parts No.	Description	Interchangeability	Q'ty	New/ Old	Note1	Note2
001	814Y91-3	Name plate DDF458		1			
002	187430-3	Housing set		1	*		
C10	263005-3	Rubber pin 6		2	*		
C20	252126-6	Hex. lock nut M4-7		2	*		
002		INC. 28			*		
002-1	187430-3	Housing set	O	1			
C10	263005-3	Rubber pin 6		2			
C20	252126-6	Hex. lock nut M4-7		2			
002-1		INC. 28					
003	266130-9	Binding head tapping screw 3X16		7			
004	126100-9	Speed change lever assembly		1			
C10	233438-6	Compression spring 4		2			
005	419250-0	F/R change lever		1			
006	650682-4	Switch TG573FSB-3		1	*		
006-1	650724-4	Switch TG573FSB-3	<	1	*		
006-1	650724-4	Switch TG573FSB-3		1	*		
006-2	650724-4	Switch TG573FSB-3	O	1			
007	620138-1	Light circuit		1			
008	232220-0	Leaf spring		2			
009	140963-9	Switch plate complete		1			
010	424476-1	Cushion		1			
011	251468-5	Slotted flat head screw M6X22		1			
012	766015-4	Keyless drill chuck 13		1	*		
012-1	763248-2	Keyless drill chuck 13	<	1	*		
012-2	763252-1	Keyless drill chuck 13	O	1			
013	265995-6	Binding head tapping screw 4X18		4	*		
013-1	266326-2	Binding head tapping screw 4X18	O	4			
014	126098-0	Gear assembly		1			
015	638989-8	Yoke unit		1			
016	619301-1	Armature		1	*		
016-1	619496-0	Armature	<	1			
017	638991-1	Brush holder complete		1	*		
C10	688172-7	Line filter		1	*		
017-1	632K64-8	Brush holder complete	<	1			
C10	688172-7	Line filter		1	*		
C11	688172-7	Line filter	O	1			
018	194427-5	Carbon brush set CB-440		1	*		
018-1	195021-6	Carbon brush set CB-440	O	1			
019	263032-0	Rubber pin 4		2			
020	453394-6	Rear cover		1			
021	266130-9	Binding head tapping screw 3X16		2			
022	644808-8	Terminal		1			
023	424430-5	Seal		1			
024	423422-1	Sponge A		1			
025	911013-5	Pan head screw M3X10 WR		1			

026	423423-9	Sponge B		1			
027	689176-2	Heat sink		1			
028	187430-3	Housing set		1	*		
C10	263005-3	Rubber pin 6		2	*		
C20	252126-6	Hex. lock nut M4-7		2	*		
028		INC. 2			*		
028-1	187430-3	Housing set	O	1			
C10	263005-3	Rubber pin 6		2			
C20	252126-6	Hex. lock nut M4-7		2			
028-1		INC. 2					
A01	126130-0	Grip assembly		1	*		
C10	154935-8	Grip 36 complete		1	*		
C20	266750-9	Square bolt M8X100		1	*		
C30	346566-9	Grip spring 60		1	*		
C40	453584-1	Grip base 60		1	*		
A01-1	123258-5	Grip assembly	<	1			
C10	154935-8	Grip 36 complete		1			
C20	266899-5	Square bolt M8X140		1			
C30	346566-9	Grip spring 60		1	*		
C31	346566-9	Grip spring 60	O	1			
C40	455189-3	Grip base 60		1			
A01-1V	123258-5	Grip assembly		1			
C10	154935-8	Grip 36 complete		1			
C20	266899-5	Square bolt M8X140		1			
C30	346566-9	Grip spring 60		1	*		
C31	346566-9	Grip spring 60	O	1			
C40	455189-3	Grip base 60		1			
A02	251314-2	Truss head screw M4X12		2			
A03	346317-0	Hook		1			
A03U	346449-3	Hook		1			
A04	452947-8	Bit holder		1			
A05	784637-8	Phillips slotted bit 2-45		2			
A06	***DC18RC	DC18RC FAST CHARGER		1			
A06	821550-0	Connector plastic case (type 2)		1			
C10	453974-8	Latch		4			
A07	194204-5	Battery BL1830 set		2	*		
A07Q	837679-2	Inner tray		1	*		
A07	196399-0	Battery BL1840 set		2	*		
A07-1	194204-5	Battery BL1830 set	O	2	*		
A07-1Q	837916-4	Inner tray	<	1			
A07-1	196399-0	Battery BL1840 set	O	2	*		
A07-1U	837916-4	Inner tray		1			
A07-2	197600-6	Battery BL1830B set	<	2	*		
A07-2	197265-4	Battery BL1840B set	<	2	*		
A07-2V	197280-8	Battery BL1850B set		2	*		
A07-3	197600-6	Battery BL1830B set	O	2			
A07-3	197265-4	Battery BL1840B set	O	2			
A07-3V	197280-8	Battery BL1850B set	O	2			

A08	450128-8	Battery cover		1			
A08Q	802J80-0	Indication label DDF458ZJ		1			
A08U	803X30-2	Indication label DDF458YJ		1	*		
A08-1U	805U18-0	Indication label DDF458Y1J	<	1			
A09	821524-1	Plastic case		1			
C10	162302-3	Latch		2			
C20	325809-2	Shaft		1			
C30	451749-9	Handle		1			
C40	453473-0	Plastic case lid		1			
A09	821550-0	Connector plastic case (type 2)		1			
C10	453974-8	Latch		4			
A09Q	802J84-2	Plastic case label DDF458ZJ		2			
A09T	821551-8	Connector plastic case (type 3)		1			
C10	453974-8	Latch		4			
A09U	803X31-0	Plastic case label DDF458YJ		2	*		
A09-1U	805U19-8	Plastic case label DDF458Y1J	<	2			
A10K	802J89-2	Plastic case label DDF458RFE		2	*		
A10	837679-2	Inner tray		1	*		
A10R	802J86-8	Plastic case label DDF458RME		2	*		
A10T	837913-0	Inner tray		1	*		
A10U	196235-0	Battery BL1815N set		1	*		
A10-1K	802J91-5	Plastic case label DDF458RFE	<	2			
A10-1	837916-4	Inner tray	<	1			
A10-1R	802J85-0	Plastic case label DDF458RME	<	2			
A10-1T	837893-0	Inner tray	<	1			
A10-1U	196235-0	Battery BL1815N set	O	1			
A10-1V	837916-4	Inner tray		1			
A11P	802J79-5	Indication label DDF458RFJ		1			
A11S	802J81-8	Indication label DDF458RMJ		1	*		
A11T	802K72-5	Indication label DDF458RFLJ		1			
A11-1S	806W39-7	Indication label DDF458RMJ	<	1			
A11-1V	808W28-8	Indication label DDF458RTJ		1			
A12P	802J83-4	Plastic case label DDF458RFJ		2			
A12S	802J87-6	Plastic case label DDF458RMJ		2			
A12T	802K73-3	Plastic case label DDF458RFLJ		2			
A12V	808W29-6	Plastic case label DDF458RTJ		2			
A13T	345261-8	Hook plate		2			
A14T	417926-3	Strap		1			
A15T	STEXBML185	RECHARGEABLE JOB SITE LIGHT		1	*		
A15-1T	DEADML185	RECHARGEABLE FLASHLIGHT	<	1			
F02	1917P9-8	Drill stand set		1			
F05	195798-3	Battery protector set		1			
F07-3	197606-4	Battery BL1830B set (2 pcs)	O	1	*		
F08-3	197267-0	Battery BL1840B set	O	1			

F09-3	197265-4	Battery BL1840B set	O	1			
F10-3	197273-5	Battery BL1840B set (2 pcs)	O	1			
F14	196448-3	Battery BL1815N set		1	*		
F14-2	196235-0	Battery BL1815N set	O	1			
F15-1	196449-1	Battery BL1815N set	O	1			
F16	196450-6	Battery BL1815N set		1	*		
F16-2	196449-1	Battery BL1815N set	O	1			
F25	1918P3-6	GUIDE RULE SET		1			

Please state Parts No. when your order.

Print Date 08/31/2026