Model No.DCL285F Cordless Cleaner

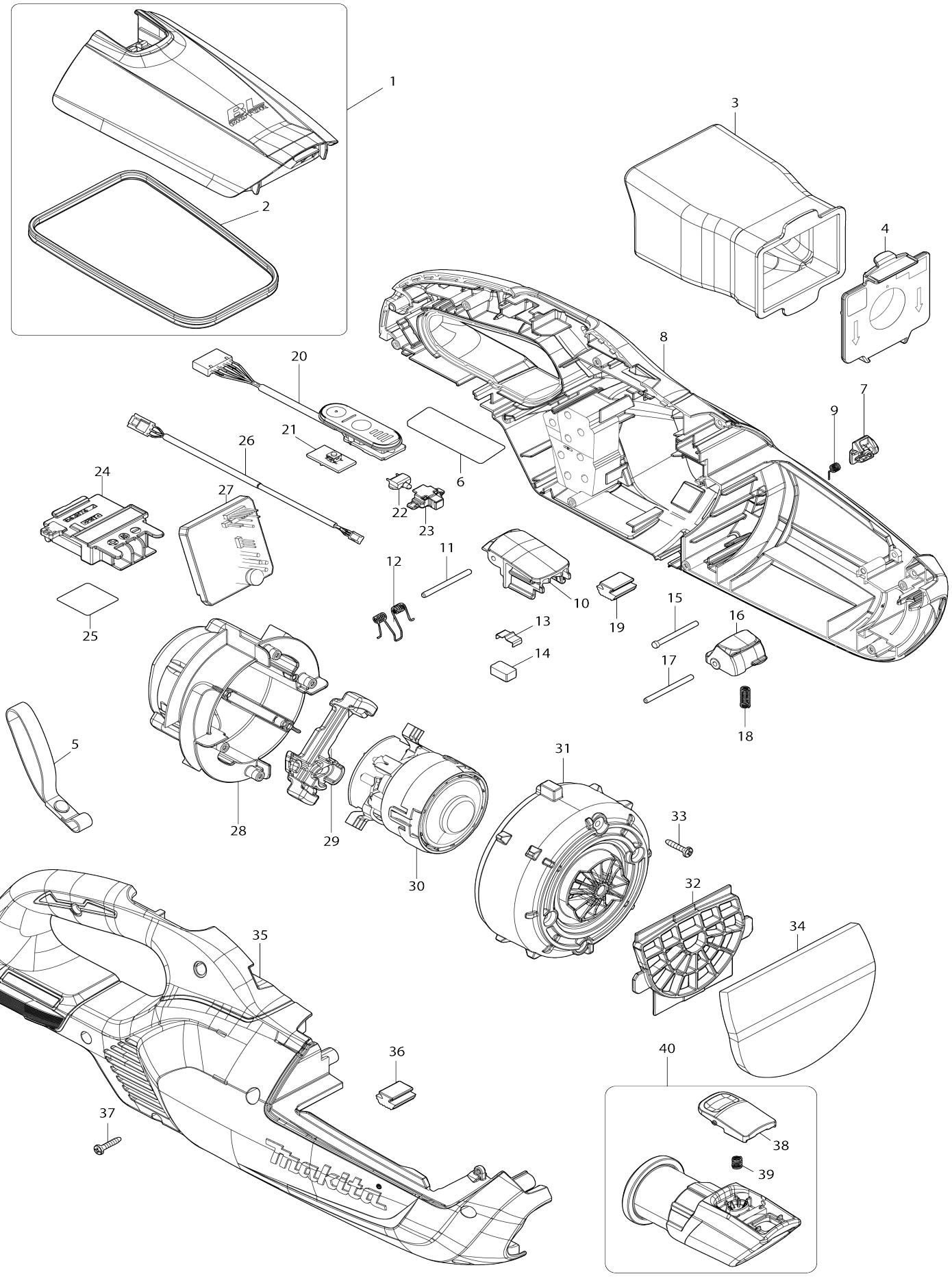

Model No.DCL285F Cordless Cleaner

Item No.	Parts No.	Description	Interchangeability	Q'ty	New/ Old	Note1	Note2
001	136907-5	Front cover assembly		1			
001		INC. 2					
001	136906-7	Front cover assembly		1			
001		INC. 2					
001	136908-3	Front cover assembly		1			
001		INC. 2					
002	424093-7	Seal		1			
003	1910M4-5	High performance dust bag set		1			
004	140K23-3	Valve stay complete		1			
005	163400-6	Hand strap		1			
006	8588J6-8	Name plate DCL285F		1			
007	459352-0	Stopper plate		1			
007	459327-9	Stopper plate		1			
007	459302-5	Stopper plate		1			
008	183Y69-0	Housing set		1			
C10	263005-3	Rubber pin 6		2			
C20	422974-9	Sponge sheet		2			
008		INC. 19,35,36					
008	183Y53-5	Housing set		1			
C10	263005-3	Rubber pin 6		2			
C20	422974-9	Sponge sheet		2			
008		INC. 19,35,36					
008	183Y70-5	Housing set		1			
C10	263005-3	Rubber pin 6		2			
C20	422974-9	Sponge sheet		2			
008		INC. 19,35,36					
009	232484-6	Torsion spring 4		1			
010	459350-4	Front cover joint		1			
010	459330-0	Front cover joint		1			
010	459351-2	Front cover joint		1			
011	268271-7	Pin 3		1			
012	233580-3	Torsion spring 4		1			
013	232264-0	Leaf spring		1			
014	424367-6	Rubber		1			
015	256590-3	Flat fillister head pin 3		1			
016	459348-1	Button B		1			
016	459329-5	Button B		1			
016	459349-9	Button B		1			
017	268271-7	Pin 3		1			
018	233344-5	Compression spring 4		1			
019	422460-0	Rubber plate		1			
020	141B54-1	Indication circuit complete		1			
021	620E74-1	Switch unit		1			
022	620E82-2	LED circuit		1			
023	141H09-2	LED case complete		1			
024	643874-2	Terminal		1			
025	8588K4-9	Serial No. label DCL285F		1			

026	632S32-9	Lead unit		1			
027	620L20-6	Controller		1	*		
C10	688163-8	Line filter		1	*		
027-1	620S51-7	Controller	<	1			
C10	688163-8	Line filter		1			
028	141E55-7	Motor cover R complete		1			
C10	263002-9	Rubber pin 4		4			
029	422723-4	Motor cover seal		1			
030	629B87-1	Motor assembly		1			
031	413645-9	Motor cover F		1			
032	413J77-0	Guard		1			
033	266429-2	Binding head tapping screw 3X16		4			
034	424804-0	Sponge sheet 76-110		1			
035	183Y69-0	Housing set		1			
C10	263005-3	Rubber pin 6		2			
C20	422974-9	Sponge sheet		2			
035		INC. 8,19,36					
035	183Y53-5	Housing set		1			
C10	263005-3	Rubber pin 6		2			
C20	422974-9	Sponge sheet		2			
035		INC. 8,19,36					
035	183Y70-5	Housing set		1			
C10	263005-3	Rubber pin 6		2			
C20	422974-9	Sponge sheet		2			
035		INC. 8,19,36					
036	422460-0	Rubber plate		1			
037	266429-2	Binding head tapping screw 3X16		9			
038	413F33-6	Button C		1			
039	232485-4	Compression spring 5		1			
040	136587-7	Inlet assembly		1			
C10	424094-5	Packing		1			
040		INC. 38,39					
040	136585-1	Inlet assembly		1			
C10	424094-5	Packing		1			
040		INC. 38,39					
040	136586-9	Inlet assembly		1			
C10	424094-5	Packing		1			
040		INC. 38,39					
A01	127827-4	Nozzle assembly		1	*		
C10	268208-4	Pin 3		4	*		
C20	451410-8	Roller		4	*		
C30	422963-4	Wiper		1	*		
A01	127825-8	Nozzle assembly		1	*		
C10	268208-4	Pin 3		4	*		
C20	451410-8	Roller		4	*		
C30	422963-4	Wiper		1	*		
A01	127828-2	Nozzle assembly		1	*		
C10	268208-4	Pin 3		4	*		
C20	451410-8	Roller		4	*		
C30	422963-4	Wiper		1	*		

A01-1	127827-4	Nozzle assembly	O	1	*		
C10	268208-4	Pin 3		4	*		
C20	451410-8	Roller		4	*		
C30	422963-4	Wiper		1	*		
A01-1	127825-8	Nozzle assembly	O	1	*		
C10	268208-4	Pin 3		4	*		
C20	451410-8	Roller		4	*		
C30	422963-4	Wiper		1	*		
A01-1	127828-2	Nozzle assembly	O	1	*		
C10	268208-4	Pin 3		4	*		
C20	451410-8	Roller		4	*		
C30	422963-4	Wiper		1	*		
A01-2	1918V7-0	NOZZLE ASSEMBLY SET	O	1			
C10	268208-4	Pin 3		4			
C20	451410-8	Roller		4			
C30	422963-4	Wiper		1			
A01-2	1918V6-2	NOZZLE ASSEMBLY SET	O	1			
C10	268208-4	Pin 3		4			
C20	451410-8	Roller		4			
C30	422963-4	Wiper		1			
A01-2	1918V8-8	NOZZLE ASSEMBLY SET	O	1			
C10	268208-4	Pin 3		4			
C20	451410-8	Roller		4			
C30	422963-4	Wiper		1			
A02	198745-3	Paper dust bag set		1			
A03	413859-0	Sash nozzle		1			
A03	413770-6	Sash nozzle		1			
A03	413809-5	Sash nozzle		1			
A04	459355-4	Nozzle holder		1			
A04	459354-6	Nozzle holder		1			
A04	459038-6	Nozzle holder		1			
A05	459356-2	Pipe		1			
A05	459353-8	Pipe		1			
A05	458942-6	Pipe		1			
A06	***DC18RC	DC18RC FAST CHARGER		1			
A06		COMPO-PARTS					
A07	197600-6	Battery BL1830B set		1			
A08	450128-8	Battery cover		1			
F06	191D71-3	Cyclone attachment set (lock)		1			
F08	191D73-9	Cyclone attachment set (lock)		1			
F10	191D75-5	Cyclone attachment set		1			
F11	191D76-3	Straight pipe 340 set		1			
F12	191D77-1	Straight pipe 340 set		1			
F13	191D78-9	Straight pipe 340 set		1			
F14	191D79-7	Straight pipe 320 set		1			
F15	191D80-2	Straight pipe 320 set		1			
F16	191D81-0	Straight pipe 320 set		1			
F17	191E30-3	Flexible hose with lock set		1			
F18	191X06-4	Nozzle assembly set		1	*		
F18-1	191X06-4	Nozzle assembly set	O	1			
F19	1910M4-5	High performance dust bag set		1			
F20	1910Y3-1	Telescopic pipe set		1			

F21	1911L1-0	Cleaner stand set		1			
F22	198538-8	Shelf brush set		1			
F23	198540-1	Shelf brush set		1			
F24	198545-1	Flexible hose set		1			
F25	198547-7	Flexible hose set		1			
F26	198553-2	Round brush set		1			
F27	198555-8	Round brush set		1			
F28	198744-5	Paper dust bag set		1			
F29	198745-3	Paper dust bag set		1			
F30	198747-9	Dust bag set		1			
F31	198868-7	Flexible hose set		1			
F32	198873-4	Shelf brush set		1			
F33	198878-4	Round brush set		1			
F34	198919-6	Long corner nozzle set		1			
F35	198990-0	Long corner nozzle set		1			
F36	198992-6	Long corner nozzle set		1			
F37	199038-1	Seat nozzle set		1			
F38	199039-9	Seat nozzle set		1			
F39	199041-2	Seat nozzle set		1			
F40	199439-3	Crevice nozzle 415 set		1			
F41	199491-1	Cyclone attachment set		1			
F43	199901-8	Tool bag set		1			
F44	199971-7	Holder set		1			
F64	1918V6-2	NOZZLE ASSEMBLY SET		1			
F65	1918V7-0	NOZZLE ASSEMBLY SET		1			
F66	1918V8-8	NOZZLE ASSEMBLY SET		1			
F67	1919G3-9	CYCLONE ATTACHMENT SET(LOCK)		1			
F68	1919H2-8	CYCLONE ATTACHMENT SET(LOCK)		1			
F69	1919H4-4	CYCLONE ATTACHMENT SET		1			
F70	1919G9-7	CYCLONE ATTACHMENT SET		1			