Model No.DBS180 Cordless Belt Sander

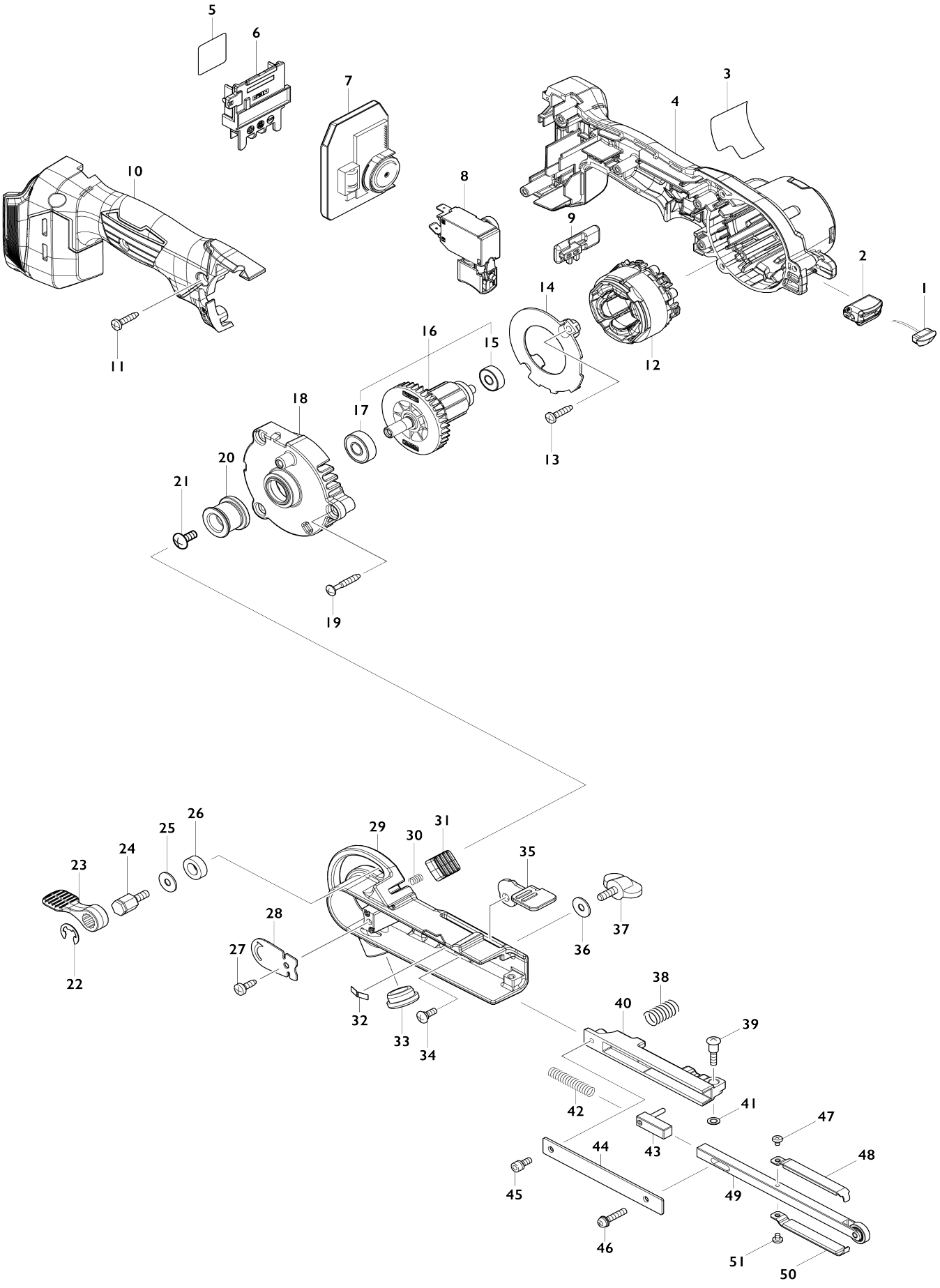

Model No.DBS180 Cordless Belt Sander

Item No.	Parts No.	Description	Interchangeability	Q'ty	New/ Old	Note1	Note2
001	620D54-1	LED circuit		1			
002	412719-3	LED housing		1			
003	857S44-3	Name plate DBS180		1			
004	183R39-7	Motor housing handle cover set		1			
C10	263005-3	Rubber pin 6		2			
004		INC. 10					
005	857S52-4	Serial No. label DBS180		1			
006	643874-2	Terminal		1			
007	620D53-3	Controller		1	*		
007-1	620R93-5	Controller	S	1			
008	651493-0	Switch C3JW-4CM-1L		1			
009	412720-8	Change lever		1			
010	183R39-7	Motor housing handle cover set		1			
C10	263005-3	Rubber pin 6		2			
010		INC. 4					
011	266326-2	Binding head tapping screw 4X18		5			
012	629A24-9	Stator		1	*		
012-1	629D28-9	Stator	S	1			
013	266326-2	Binding head tapping screw 4X18		2			
014	412718-5	Baffle plate		1			
015	210031-3	Ball bearing 606DDW		1			
016	519645-8	Rotor assembly		1			
016		INC. 15,17					
017	210005-4	Ball bearing 608DDW		1			
018	312A10-4	Bracket		1			
019	265999-8	Binding head tapping screw 4X25		3			
020	317522-6	Driving roller		1			
021	265092-8	Truss head screw M5X12		1			
022	961014-3	Stop ring (EXT) E-8		1			
023	272229-0	Lever 40		1	*		
023-1	271487-5	LEVER 40	O	1			
024	265494-8	Hex. head bolt M5X13		1			
025	253807-5	Flat washer 5		1			
026	257249-5	Ring 9		1			
027	266026-4	Binding head tapping screw 4X12		1			
028	345196-3	Safety cover		1			
029	140U96-6	Pulley cover complete		1			
030	231026-3	Compression spring 4		1	*		
030-1	233054-4	Compression spring 4	<	1			
031	412721-6	Knob		1			
032	232185-6	Leaf spring		1			
033	421198-4	Cap		1			
034	265028-7	Pan head shoulder screw M4X11		1			
035	345197-1	Cam lever		1			
036	253807-5	Flat washer 5		1	*		

036-1	253111-2	Flat washer 6	<	1			
037	265720-5	Thumb screw M5X14		1			
038	233333-0	Compression spring 10		1			
039	265090-2	Pan head shoulder screw M4X20		1			
040	317525-0	Arm holder		1			
041	941052-1	Flat washer 4		1			
042	233332-2	Compression spring 6		1			
043	153312-1	Arm tensioner complete		1			
044	345195-5	Arm cover		1			
045	922111-0	Hex. socket head bolt M4X10 W		1			
046	911138-5	Pan head screw M4X20 WR		1			
047	265040-7	Pan head screw M3X4		1			
048	153314-7	Shoe 9 complete		1			
049	153310-5	Arm 9 complete		1			
050	153314-7	Shoe 9 complete		1			
051	265040-7	Pan head screw M3X4		1			
052	620N53-3	Controller B	S	1			
053	652119-7	Pan head screw M2X6	S	6			
A01	A-34469	ABRASIVE BELT 9X533-AA80		1			
A02	122652-8	Dust nozzle assembly		1			
A03	140W02-3	Grip base complete		1			
A04	144163-3	Grip 36 complete		1			
A05B	450128-8	Battery cover		1			
A06B	***DC18RC	DC18RC FAST CHARGER		1			
A06B		COMPO-PARTS					
A07B	197280-8	Battery BL1850B set		2			
A08B	8022Y1-9	Indication label DBS180RTJ		1			
A09B	8022Y2-7	Plastic case label DBS180RTJ		2			
A10B	821550-0	Connector plastic case (type 2)		1			
C10	453974-8	Latch		4			
A11B	835P86-9	Inner tray		1			
F07	192278-0	Hose complete 28-1.5 set		1			
F08	192279-8	Hose complete 28-3.0 set		1			
F09	192349-3	Joint 25 set		1			
F27	193618-5	Stand set		1			
F37	191N60-8	Dust cover set		1			
F38	1917A9-3	Abrasive belt 533-40 set		1			
F39	1917B0-8	Abrasive belt 533-60 set		1			
F40	1917B1-6	Abrasive belt 533-80 set		1			
F41	1917B2-4	Abrasive belt 533-100 set		1			
F42	1917B3-2	Abrasive belt 533-120 set		1			
F43	1917B4-0	Abrasive belt 533-40 set		1			
F44	1917B5-8	Abrasive belt 533-60 set		1			
F45	1917B6-6	Abrasive belt 533-80 set		1			
F46	1917B7-4	Abrasive belt 533-100 set		1			
F47	1917B8-2	Abrasive belt 533-120 set		1			
F48	1917B9-0	Abrasive belt 533-40 set		1			
F49	1917C0-5	Abrasive belt 533-60 set		1			
F50	1917C1-3	Abrasive belt 533-80 set		1			
F51	1917C2-1	Abrasive belt 533-100 set		1			
F52	1917C3-9	Abrasive belt 533-120 set		1			